2023 PACIFIC GAMES OFFICE

Approval /Signature Required

Supplier Name: RJ & Associates Company.

1) Minute	☑	Sign by FC _____	Sign by ED _____
3) Requisition	☐	Sign by Complianceofficer	_____
2) Requisition	☐	Sign by FC _____	Sign by ED _____
3) Payment Voucher	☐	Sign by FC _____	Sign by ED _____
4) LPO	☐	Sign by FC _____	Sign by ED _____
5) IB Authorisations	☐	Sign by FC _____	Sign by ED _____

Comments:

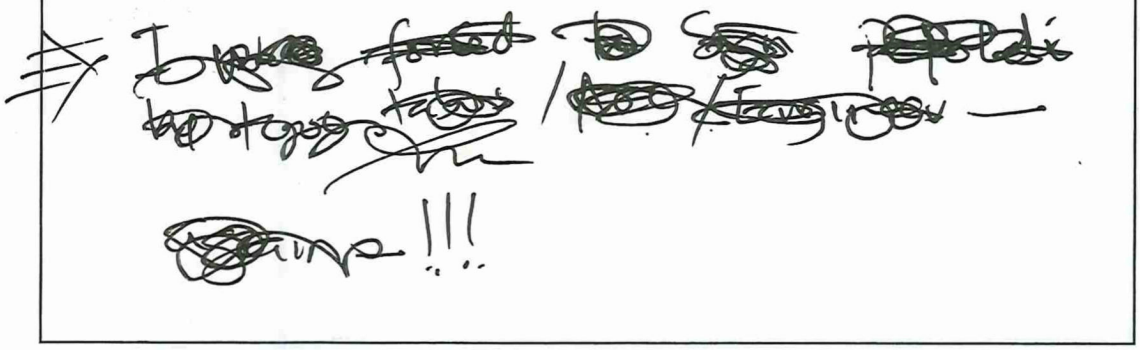

Your Reference

* Important Information displayed on ANZ Internet Banking screen is not shown on this printout

Held for Authorisation
Transaction Number AIY10460

Transaction Details

ANZ to Other Bank Transfer

From Account: 5691140
Transfer Amount in Local Currency: SBD 679,432.82
Transfer From Amount: SBD 679,432.82
Indicative :
My Reference: Final Pay-Fence

Payment Details

You can view the status and details of your transactions and requests for the last 12 months via ANZ Internet Banking.

21/8/24

NATIONAL HOSTING AUTHORITY
P O Box 2443
Honiara, Solomon Islands
E:Accounts@sol2023.com.sb

PAYMENT VOUCHER

DATE 21/08/2024

RJ & Associates Company Ltd
Honiara

Cheque Number IB TRANS

Total Amount Paid $679,432.82

Final 50% of Variation Payment No.02 for the construction of additional picket fencing at NSC/NHA land Burnscreek.

In Payment For the following invoices:

Supplier Inv	Purchase No.	Invoice Date	Invoice Amount	Previous Payments	Current Payment
1045	00002145	26/03/2024	$4,330,550.36	$3,502,533.30	$679,432.82

Payment Voucher Prepared By: _____ Date: 21/08/24

Signature of Claimant: _____

PRINT NAME: _____

NATIONAL HOSTING AUTHORITY

REQUISITION NUMBER: pnha - 1350/2024

DEPARTMENT: pnha - Finance & Admin

PURCHASE REQUISITION

QUANTITY	UNIT	DESCRIPTION (Full and clear details of payment)	PURCHASING OFFICER USE ONLY		
			SUPPLIER	ORDER NO.	COST
		Variation - Final payment NO.02 50% claim for the Overall Completion the additional picket fencing at parcel 192-007-0158 Burns Creek of NSC Land.	RJ & Associates Company Ltd.		$734,521-97
				TOTALS	$734,521-97

Approval is requested to incur expenditure on the above

Estimated Cost (SBD):

Date: 20/08/24

Requisition Officer (Name): Maverick Nulau

Sign:

Account Code: G-2717

Account Name: Other Local other Cost.

Funds available on this account:

Supervisors Certification (Accountable Officers):

Certifying Officer (Name): Leeroy-B

Sign:

Post: ED PNHA

Department: GFC

Authority is granted for expenditure not exceeding:

SBD$ 734-521-92

Signed:

Name:

Note: Authority for expenditure must be given by accounting officer or his/her deligated

Threshold Checklist

Payment requires one quote (10,000 below)	
Payment requires three quotes ($10,000.00 above)	
Is it a ITB Contract Payment	
Is it a GTB Contract Payment	
Payment is a Bid Waiver	

Compliance Check by: Signature

Name: Peter. Hmae Date: 26/8/23

Position:

NATIONAL HOSTING AUTHORITY

REQUISITION NUMBER: PMU - 1360/2024

DEPARTMENT: PMU - Finance & Admin

PURCHASE REQUISITION

QUANTITY	UNIT	DESCRIPTION (Full and clear details of payment)	PURCHASING OFFICER USE ONLY		
			SUPPLIER	ORDER NO.	COST
		Variation - Final payment NO.02 50% claim for the Overall Completion the additional picket fencing at parcel 192-007-0158 Burns Creek at NSC Land.	RJ & Associates Company Ltd. and claim.		$734,521.97
				TOTALS	$734,521.97

Approval is requested to incur expenditure on the above

Estimated Cost (SBD): $1[illegible]

Requisition Officer (Name): Dominick Nuluar

Date: 20/08/24

Sign:

Account Code: 6-2217-1

Account Name: Other Local other Cost

Funds available on this account:

Supervisors Certification (Accountable Officers):

Certifying Officer (Name): Leonard B

Sign:

Post: ED PMU

Department: GFC

Authority is granted for expenditure not exceeding:

SBD$ 734,521.92

Signed:

Name:

Note: Authority for expenditure must be given by accounting officer or his/her deligated

Threshold Checklist

Payment requires one quote (10,000 below)	
Payment requires three quotes ($10,000.00 above)	
Is it a ITB Contract Payment	
Is it a GTB Contract Payment	
Payment is a Bid Waiver	

Compliance Check by: Signature

Name: Peter Hinau Date: 20/8/24

Position:

NATIONAL HOSTING AUTHORITY
XVII 2023 PACIFIC GAMES

Ref: GL-8/8/24 Date: 8 August 2024

MEMO

To: Christian Nieng
Executive Director - NHA

Signature ..... Date 8/8/24

Thru: Leeroy Bird
ED -PMU

Signature ..... Date 8/08/24

Dear ED,

Subject: **REQUEST 50% VARATION PAYMENT 2 TO RJ & ASSOCIATES COMPANY LTD FOR THE CONSTRUCTION OF ADDITIONAL PICKET FENCING AT PARCEL 192-007 -0158 AT NSC LAND, BURNSCREEK.**

I refer to the above, payment is requested to the aforementioned company for works done for NHA.
Particulars of payment are as follows:

No.	Description	Amount
1	Variation Payment 2 – 50% claim for the overall completion the additional picket fencing at parcel 192 -007 -0158, Burnscreek	$734,521.97
	TOTAL	**$734,521.97**

Attached are relevant documents for this payment

Kind Regards,

Graham Lilo
Project Manager
National Hosting Authority

C/-P.O. Box 2443
Honiara
Solomon Islands

Phone:
677 7308800

Facebook page:
Sol2023 XVII Pacific Games

PAYMENT SCHEDULE

CONSTRUCTION FOR PICKET FENCING AT NSC/NHA LAND BURNSCREEK - LOT 1

RJ & ASSOCIATES COMPANY LTD

Payment No.	DATE		Award Amount	Retention 5%	With Holding Tax 7.5%	Amount Paid	Status
			3,212,632.13		7.50%		
No.1	27/03/2024	50%	1,606,316.07		120,473.70	1,485,842.36	Paid
No.2	11/06/2024	45%	1,445,684.46		108,426.33	1,337,258.12	Paid
No.3		5%	160,631.61		12,047.37	148,584.24	
Variation No.01	16/07/2024	50%	734,521.97		55,089.15	679,432.82	Paid
Variation No.02	20.08.2024	50%	734,521.97		55,089.15	679,432.82	Payment in Progress
TOTAL			***4,681,676.07***	-	***351,125.71***	***4,330,550.36***	

RJ &ASSOCIATES COMPANY LIMITED

INVOICE

Date: 6/8/2024
Invoice #: 116
For: Final 50 % Claim for The Construction of additional Picket Fence at Chengs Land Burns
Bill To: NHA

West Honiara
Phone: 677 7463888
Email - rejack36@gmail.com
BSP ACC# 2001204706

DESCRIPTION	AMOUNT
Final 50% Claim for The Construction of additional Picket Fence at Chengs Land Burns Creek	$734,521.97

SUBTOTAL	$734,521.97
SALES TAX	$0.00
TOTAL	$734,521.97

Make all cheques payable to RJ &ASSOCIATES COMPANY LIMITED. If you have any questions concerning this invoice, contact Name, Phone Number, Email

THANK YOU FOR YOUR BUSINESS!

RJ & ASSOCIATES COMPANY LTD. THE COMMON SEAL OF

PACIFIC GAMES
SOLOMON ISLANDS

P.O. BOX 2443 Sea King Restaurant Building, Honiara, Solomon Islands

PAYMENT CERTIFICATE NO. PC- 01

Payment Schedule Name:	Moblisation Payment		
Project Name:	Construction of picket fencing at NSC Land, Burnscreek - Lot 1		
Contractor:	RJ & Associates Company Ltd		
Project Manager	Graham Lilo	**Certificate:**	PC - 02
Contract Administrator/Manager:	Soleana Gagahe	**Date Invoice Received:**	06-08-24
		Date Issued for payment:	08-08-24
		Contract No:	NA

A PROGRESS CLAIM SUMMARY

REF	PROGRESS CLAIMS	CONTRACT DETAILS	PAYMENT DETAILS	NOTES
	Contract Value	$ 3,212,632.13		
1	Payment 1 - Mobilization (50%) Payement shall be made prior to contractor's mobilization to site and commencement of works	$ 1,606,316.07	$ 1,606,316.07	Paid
2	Payment 2 - Progress Payment of 45% shall be made upon completion of all works as required in the scope of works	$ 1,445,684.46	$ 1,445,684.46	Paid
3	Payment 3 -Variation Payment -1	$ 734,521.97	$ 734,521.97	Paid
4	Payment 4 -Variation Payment -2	$ 734,521.97	$ 734,521.97	This Claim
7	**Progress Claim to date**	**$ 3,052,000.52**		
8	**Original Contract Value**	**$ 3,212,632.13**		
9	**Total Adjusted Contract Value**	**$ 4,681,676.07**		
10	**Balance of Contract Payment**	**$ 160,631.61**		

B PAYMENT DETAILS

	Progress payment for this claim	$ 734,521.97	
	Retention-Purchaser retains % of this payment pursuant to clause	$ -	
	Amount payable for this claim after Retention	$ 734,521.97	

Payment is certified as conform to payments terms and conditions as stated in Section IV: Payment Schedule of the Contract (Contract No: GTB 11/21)

Payment is hereby certified: ..../...../.....
Graham Lilo (Project Manager) *Date*

Compliianced and approved by: ..... (PP) ...../...../.....
Soleana Gagahe (Contract Manager) *Date*

Claim is hereby approved for payment by: 8/08/24
Leeroy Bird (Executive Director - PMU) *Date*

On presentation of this original to the Employer, the Contractor is entitled to payment within the period stated in the Contract Agreement: Article 10.

MEMORUNDUM

Ref/06/24 **Ref No issued 06-24**

To: Dr Jimmie Rodgers
NHA Chair/Secretary to the Prime Minister
NHA/OPMC

Thru: Christian Nieng
Executive Director/Secretariat
Chairman-ITB
National Hosting Authority

Date: 19th June 2024

Dear Chair, NHA/SPM,

SUBJECT: REQUEST APPROVAL TO AWARD VARIATION TO RJ & ASSOCIATES COMPANY LTD FOR CONSTRUCTION OF PICKET FENCING AT CHENGS LAND-BURNSCREEK.

I refer to the above, approval is required to award Contract for the works mentioned above.

The National Hosting Authority through project Management unit requires Construction of Picket fencing at Chengs Land.

The works is critical for the security of the land which has been purchased from Chengs Construction Limited as part of the Legacy Haus purchase. The area is currently unfenced and poses the risk of illegal settlers to move in. To be consistent with the neighboring NHA land recently fenced, it is recommended that the same picket fence be constructed for this site as well.

The compliance team after review of the submitted documents agreed that the request made by is in compliant with the variation process stipulated in the PCAM 2013 Chapter 2 (2.7) as well as approval by the NHA board with waiver of threshold instruction granted by MoFT as follows.

1. *Pursuant to the Decision of the NHA Board taken at its meeting on 23rd March 2023, authorizing the expenditure level that can be approved by the NHA Chair of up to $8 million dollars per procurement/tender.*

2. *The new threshold issued by the Minister of Finance in accordance with the Cabinet endorsed paper 2023.*

Lot No	Bidders name	Description of Lot	Recommended Bid amount
Lot 1	**RJ & Associates Company Ltd**	Construction of additional Picket Fence at Chengs land at Burnscreek	$1,469,043.94

Attached is the Technical Evaluation Report submitted by PMU Technical Evaluation Committee

Your Approval is hereby sought to expedite commencement of this very important project.

Sincerely

Leeroy Bird
Executive Director- PMU
National Hosting Authority

Procurement & Compliance Unit
National Hosting Authority

REQUEST FOR VARIATION APPROVAL

VARIATION (VO-1) FOR CONSTRUCTION OF PICKET FENCE AT CHENGS LAND-BURNSCREEK

CONTRACTOR NAME: RJ & ASSOCIATES

Request Letter for (ED/CEO/Chair/Tender Board Approval

NHA Ref: **NHA-PMU-190624**

Date: 20/06/24

To: **Dr. Jimmie Rodgers**
NHA Chair/GTB Co-Chair
National Hosting Authority

Date: 20/06/24

Dear ED,

SUBJECT: REQUEST APPROVAL FOR VARIATION FOR CONSTRUCTION OF PICKET FENCING AT BURNS CREEK TO ALLOW CONSTRUCTION OF PICKET FENCE FOR LAND NHA PURCHASED FROM CHENGS CONSTRUCTION LIMITED AT BURNS CREEK

I hereby refer to the above subject made in Pursuant to the need to construct a picket fence for the land NHA purchased from Chengs Construction Ltd that was part of the Legacy Haus purchase as well.

Furthermore, as per **SIG/PCAM 2013-*SECTION 6: CONTRACT ADMINISTRATION*** and ***sub-clause 6.1-Contract Variations*, *paragraph 1*** which states "*Variations may only be approved if quantities or the scope of works are increased at the Purchaser's request*" and whereby if deemed necessary to issue a contract variation.

In this case, we need to construct a picket fence around the land to stop illegal settlers from moving into the area. NHA has spent millions of dollars on the purchase of the Legacy Haus of which this vacant land was also part of. Therefore, it is only fitting that the area be fenced to discourage illegal settlers as well as to be consistent with the recently completed fence at the NHA land at Burns Creek. In doing so, the public will know that both lands are NHA owned.

The variation claim amounts to a total cost of **$1,469,043.94**, which is more than 10% of the contract value, thus your perusal and approval are needed to expedite this order.

Attached is the variation order for your review as well as the scope of works and priced Bill of Quantities for these additional works.

Thank you for your understanding.

Sincerely,

Graham Lilo
Project Manager- PMU

CC: FC – NHA
ED- NHA
ED - PMU
CM- PMU
NHA Legal Team

VARIATION ORDER FORM

The issuance of this Variation Order Form shall form part of the Contract, Contractor and/or Supplier shall not proceed with Works or Supply of Goods unless approval is granted by the Authorizing Officer for the value of variations within or below 10% of the total contract value, or responsible tender boards as reference to PCAM 2013.

CONTRACT SUMMARY INFORMATION:

CONTRACT NO:	GTB-GFC 01/24-LOT 1	**Variation Order No:**	No.1
CONTRACT NAME:	CONSTRUCTION OF PICKET FENCING AT NSC LAND AT BURNSCREEK, LOT 1		
SITES	BURNS CREEK		
CONTRACTOR NAME	RJ & ASSOCIATES COMPANY LIMITED		

DESCRIPTION OF ISSUING OF VARIATION ORDER (indicate below variation)

Requested by the Purchaser on: 15/04/23

TECHNICAL REASON (S) FOR VARIATION:

1.	**Reason for Variation:**	Additional Works/Goods	✓	Design Change	
		Specification Change		Provisional Item	
		Prime Cost Item		Omitted Work	
2.	How will this variation affect the contract period?		Increase original cost of Contract only		

The above will necessitate the following:

ITEM	DESCRIPTION	UNIT	QTY	RATE	AMOUNT
1	Construction of additional picket fence for land purchased from Chengs Construction Ltd at Burns Creek	no.	1		$1,469,043.94
				TOTAL VARIATION COST (this Variation)	

The value of the variations is calculated according to the Contractor and Supplier's bid rates

ADDITIONAL EXPENDITURE:

Original Contract Value	$3,212,632.13	
Estimated Variation Cost	$1,469,043.94	
CPA (Contract Price Adjustment)	$4,681,676.07	
Total Project Sum + Variation	$7,068,501.93	

The above rates are valid at base date for the purposes of contract price adjustment.			
Summary of Variation Order and Claims is attached.			
For Approval of this Variation Order Form, parties' representatives signed hereby:			
Variation recommendation by: *(to be requested by Technical Specialist and signed by Contractor/Supplier)*			
Name: Graham Lilo	Signed: ..... Date: 19/06/2024	Name: Lynnel Restaurie **SUPPLIER**	Signed: ..... Date: 20/06/24
Endorsement by: (this endorsement shall be submitted for final approval by Authorizing Officer or relevant Tender Boards)			
Name: Leeroy Bird **PROCUREMENT & COMPLIANCE MANAGER**	Signed..... Date: 19/06/2024	Name: Debbie Sifoni Rence **FINANCIAL CONTROLLER**	Signed ..... Date: 21/06/24
Name: Christian Nieng **Executive Director** **Secretariat** **National Hosting Authority**	Signed: ..... Date: 21/06/2024		
Approval By: (approval by relevant Authority according to the revised approval threshold granted by the NHA Board)			
Name: Dr. Jimmie Rodgers **Secretary to Prime Minister** **NHA Chair/GTB Co-Chair** **National Hosting Authority**	Signed ..... Date: 21/6/ 2024		

Suppliers and Contractors shall be notified to proceed with variation Works or Supplies after approval of order to vary Contract Scope of Works, quantities, and values.

SCOPE OF WORK

The work to be performed under this contract shall consist of furnishing all plans, equipment, materials, supplies, and manufactured articles, and for furnishing all transportation and services, including fuel, power, and essential communications, and forthe performance of all labor, work, or other operations required for the fulfillment of the Contract in strict accordance with the specifications as herein defined.

PROJECT SITE:



Depicted above is the site proposed for fencing

PRE-WORK PREPARATIONS

- While a building department permit is not required for this project, thecontractor should secure any necessary encroachment permits.
- The Contractor should secure an area on the properties to park trailers,vehicles, or any other equipment, and to place portable toilets.
- Contractor shall ensure there is electricity available on site.

SITE PREPARATIONS

- The contractor shall make sure that any shrubs or other obstructions arecleared from the fence path.
- The contractor will demolish and dispose of all existing fences:
- All pressure treated lumber must be disposed of properly.
- All old fence posts must be removed completely.
- All boards, nails, and debris must be cleaned up.
- The Contractor shall ensure that any ground that is getting dug into is clear of any utilities, wires, or pipes.

EXCAVATION

The contractor shall ensure that excavation for pad and strip footings conform to the details as in the drawings where the depth of pad footing is 400mm x 300mm with strip footing for block work is 300mm depth and 300mm width for fence foundation.

REINFORCEMENT

The Contractor shall ensure that all reinforcement for footings is D12 or 12mm rough steel reinforcements as in the drawings with stirrups as required.

CONCRETE FOOTING

Concrete shall be of 25Mpa with required quantities as in the bills of quantities.

BLOCK WORK

Contractor must build two layers of blocks of 16-inch size prior to bottom fence framing for fence panels.

FENCE POSTS

Contractor must use 75mm square posts of 2200mm spacing with top welded "Y" allow for installation of Razor Barbed wire. Any portions of the fence that are on sidewalks or retaining wall shall be mounted with surface mounting brackets with appropriate concrete anchors.

FENCE INSTALLATION AND SPECIFICATIONS

The fence shall be of 25mm square tube welded across 450 meters as specified in the drawings.

GATES

Contractor must use 100mm square posts at the bridge linking the area and install double gate with industrial hinges and locks.

CLEAN UP

The Contractor will be responsible for all cleanup of the job site to a"broom clean" status.

If there are any areas of concrete that are stained with dirt, paint, or any other substance from construction, the Contractor will be responsible forcleaning stains to where it is free of any visible sign.

The Contractor will be responsible for reinstalling any items that wereremoved from building for the purposes of construction unless other arrangements have been made and agreed upon with NHA.

The Contactor will remove and dispose of all trash and excess unusablematerials.

The Contractor will remove all tools, equipment, drop cloths/tarps, trash(produced by Contractor), and any other items that were put there by theContractor.

MATERIALS AND EQUIPMENT

The Contractor shall supply all necessary materials, fasteners, hardware,concrete, wood, and any other items necessary to complete the project.

The Contractor shall use his/her own equipment and shall provide allnecessary tools and materials to complete the job as described.



PROJECT MANAGEMENT UNIT

BILLS OF QUANTITIES FENCING AT NSC LAND AT BURNSCREEK

No.	DESCRIPTION OF WORK	QTY	UNIT	RATE (SBD)	AMOUNT (SBD)
A1	**Proposed Works**				
A1.1	*The following Bill of Quantities is particularly for proposed construction of proposed storm wtaer drainage at the games facilities*	*Note*			
A1.2	*The proposed works include all siteworks, Demolition works & new works as per the construction drawings & Specifications*	*Note*			
A2	**Bill of Quantities**				
A2.1	*Unless otherwise stated here in this Bill of Quantities, General measurement of work is in accordance with Australian Standard Method of Measurement of Building Works (ASMM) 5th Edition*	*Note*			
A2.2	*Where billing units are in contrary to ASMM5, such billing units have been converted for pricing conviniency by local contractors*	*Note*			
A3	**Contingencies**				
A3.1	*Refer to General Conditions of Contract for appropriate clauses regarding contingencies. Where given, the percentage Contingency shall be included and allowed for in the Summary of this Bill of Quantities*	*Note*			
A4	**Measurement**				
A4.1	*Unless otherwise stated herein, work shall be measured net as fixed in position*	*Note*			
A5	**Unit Rates**				

A5.1	*Unit Rates shall include cost of material, wastage, Cartage, Taxes, Duties and other allowances stated under general items of each section or sub section and preamble items to this Bill of Quantities.* ***Note that Labour costs, Transportation & Contractor Profits and overheads appear as separate components in the Summary of this Boq***	*Note*			
A5.2	*Also refer to appropriate Tender Conditions for any selected works or activities which are deemed to be included in the costs or unit rates*	*Note*			
A6	**Symbols and Abbreviation**				
	m = metre				
	m^2 = square metre				
	m^3 = cubic metre				
	Kg = Kilogram				
	t = tonne				
	No = number				
	Ls = lump Sum				
	Pc = Provisional Cost				
	Pair = Pair of Items				
	max = maximum				
	min = minimum				
	> = greater than				
	< = less than				
	RC = Reinforced Concrete				
	dia = diameter				
A7	**General Notes to Contractors**				
A7.1	*Unless otherwise stated in the Contract, This Bill of Quantities shall form part of the Tender or contract documents and shall be read along with the Tender Conditions, General Contract Conditions, Specifications and the Drawings*	*Note*			
A7.2	*Contractor shall further obtain general Notes and specifications from the Tender drawings & Specifiations*	*Note*			
A7.3	*Contractors are strongly advised to inspect the proposed project site and existing buildings under construction to ascertain the nature of work and all other details in connection with the proposed works and to allow for such in determining their Tender*	*Note*			
1.0	**Preliminaries & Site Establishments**				
1.1	Establishment for water and temporary electrical connection for works as required.	1	item	$10,000.00	$ 10,000.00

1.2	Erosion and sediment control during construction	1	item	$ 5,000.00	$ 5,000.00
1.3	Supervision, Project Management & Contractor On-Costs	1	item	$10,000.00	$ 10,000.00
1.4	Allow for construction works insurance such as public liabilities & workers compensation	1	item	$20,000.00	$ 20,000.00
1.5	Allow for site security during construction	1	item	$10,000.00	$ 10,000.00
2.0	**Earthworks/Excavation**				
2.1	Allow for clearing and disposal of shrubs and debris etc prior to earthworks.	500	m2	$ 10.00	$ 5,000.00
2.2	Allow for trench excavation including disposal of excavated earth. Also allow for the excavated earth to be levelled, compacted & neathly dressed in preparation for concrete pour	300.0	cu.m	$ 280.00	$ 84,000.00
3.0	**Concrete Works**				
3.1	Provision of concrete pad footing of 300mm x 300mm x 300m of 25mpa for 200 steel posts along fence	50	Cu.m	$ 1,800.00	$ 90,000.00
	Supply and install as block to the fence with mortar of 300x150x 150mm above ground level with two layer	2500	no	$ 17.50	$ 43,750.00
	Allow for concrete mortar fill as required to block works 20mpa	15	Cu.M	$ 1,200.00	$ 18,000.00
	Allow for smooth plaster @ 10mm thick for block works at required	500	m2	$ 25.00	$ 12,500.00
	Allow for top fence concrete cover of 150mm high along fence x 25mpa	15	cu.m	$ 1,500.00	$ 22,500.00
	Steel & Reinforcements				
3.2	Supply and install reinforcement for fence footings as in designs x 12mm	1000	m	$ 15.00	$ 15,000.00
	Supply and install for sturrups 6mm @200mm spacing for fence footing of 300mm x 300mm footing reinforcements	1000	m	$ 25.00	$ 25,000.00
	Allow for 75mm x 75mm steel posts x 2800mm with braced bottom and -Y-Shaped top	130	no	$ 550.00	$ 71,500.00
	Allow for 50mm x 50mm galvanized steel for top and bottom braces as required	220	m	$ 135.00	$ 29,700.00

	Allow for 25mm x 25mm length fabricated and welded to fence x 2400mm length @spacing of 100mm as required in the design	2200	no	$ 145.00	$ 319,000.00
	Supply and install double 25mm x 25mm as locks to install razor barbed wire @ top fence	900	m	$ 135.00	$ 121,500.00
	Miscelenouse Items & Painting				
	Allow for miscelenouse items for metal fabrications and welding	1	Item	$10,000.00	$ 10,000.00
	Allow for miscelenouse items for painting of fence with anti-Rust	1	Items	$20,000.00	$ 20,000.00
	SUBTOTAL				**$ 942,450.00**
	Labour (30%)				**$ 282,735.00**
	Profit & Margin (15%)				**$ 141,367.50**
	Sub-Total				**$1,366,552.50**
	WHT (7.5%)				**$ 102,491.44**
	TOTAL				**$1,469,043.94**

CONTRACT AGREEMENT

FOR

CONSTRUCTION OF PICKET FENCING AT NSC LAND AT BURNSCREEK

LOT 1

BETWEEN

NATIONAL HOSTING AUTHORITY

(Solomon Islands Government)

AND

RJ & ASSOCIATES COMPANY LIMITED

March 2024

Table of Contents

SECTION I: CONTRACT AGREEMENT 2
SECTION II: GENERAL CONDITIONS OF CONTRACT 5
SECTION III: SPECIAL CONDITIONS OF CONTRACT 13
SECTION IV: PAYMENT SCHEDULE 17
SECTION V: SCOPE OF WORKS/ SPECIFICATIONS 18
SECTION VII: ANNEXES TO THE CONTRACT 29

SECTION I: CONTRACT AGREEMENT

This Contract Agreement is made between the two parties mentioned as the Client and Contractor herein described as below.

The Client

The Client herein named as the Government of the Solomon Islands, which has its seat in Honiara, represented by the **National Hosting Authority**, legally represented in this matter by **Mr Christian Nieng, the Executive Director - NHA**, hereinafter referred to as the Client,

And

The Contractor:

The Contractor herein named as **RJ & Associates Company Limited** which has its registered office in Honiara, legally represented in this matter by **Mr Jack Resture Jnr,** hereinafter referred to as the Contractor, and have agreed to conduct **Construction of Picket Fencing** at the **NSC Land, Burnscreek, East Honiara** herein mentioned as Works specified in the Scope of Works.

1. The price for the execution of Works is confirmed in the Schedule of Estimated Quantities as part of your submission dated **15th March 2024.**
2. The total accepted Bid Price shall be **SBD$ Three Million, Two Hundred and Twelve Thousand, Six Hundred and Thirty-Two Dollars and Thirteen Cents only (SBD $3,212,632.13).** The agreed price for the execution of the Works is fixed for the duration of the Contract.
3. The place where the Works have to be executed shall be at the **NSC Land, Burnscreek, East Honiara** at the specific site as selected by the Client.
4. The time limits for execution of the Works shall be maximum of **90 days** and shall be on the basis turnkey specific contract process.
5. The Contractor shall strictly comply with the terms and conditions as mentioned in the Special & General Contract Conditions for the Execution of Works and the Technical Specifications/Bill of Quantities/Drawings. Any general and special terms and conditions drawn up by the Contractor do not apply.
6. The Contractor, herein **RJ & Associates Company Limited** shall make invoice(s) to the Client at the Address mentioned as Project Management Unit of National Hosting authority, quoting the, the amount of progress payment as per Schedule and above-mentioned Contract number and name.
7. This Contract is subject to the provisions of the attached General Conditions of Contracts for the Execution of Works.
8. This Contract is made up of the following documents, in order of precedence:

- *this Contract Agreement*
- *the Special Conditions of Contract;*
- *the General Conditions of Contract;*

- *Payment Schedule*
- *Scope of Works/ Specifications*
- *Specifications & General Requirements*
- *Site Setout & Drawings*
- *Annexes to the Contract*
  - Tender Award Letter
  - Performance Securing Declaration
  - Contractor's Priced Bill of Quantities
  - Contractor's Insurance Certificate
  - Contractor's HCC License
  - Contractor's Company Haus License
  - Contractor's Inland Revenue Division Tax Certificate
  - Contractor's Work Schedule

The various documents making up this Contract shall be deemed to be mutually explanatory; in cases of a different interpretation, the documents shall prevail in the order in which they appear above.

SIGNING OF CONTRACT AGREEMENT

This Contract enters into force on the date on which it is signed by both Parties [and ends as soon as the Execution of the Works has been completed].

IN WITNESS whereof the parties hereto have caused this Agreement to be executed in accordance with the laws of Solomon Islands on the day, month and year specified above.

Parties to this Contract hereby agreed and signed as follows:

For the Client - National Hosting Authority		**For the Contractor**	
Name:	Christian Ni[illegible]	**Name:**	Jack Resture Jnr
Signature:		**Signature:**	
Designation:	Executive Director National Hosting Authority	**Designation:**	Managing Director RJ & Associates Company Limited
Date:	26/03/2024	**Date:**	25/03/2024

NATIONAL HOSTING AUTHORITY EXECUTIVE DIRECTOR SOL 2023 PACIFIC GAMES

R.J. & ASSOCIATES COMPANY LTD. THE COMMON SEAL OF

Witness signing by Project Management Unit/NHA

Signature	.....
Name:	Leeroy Bird
Designation:	Executive Director Project Management Unit, NHA
Date:	25/03/2024

NATIONAL HOSTING AUTHORITY EXECUTIVE DIRECTOR PMU SOL 2023 PACIFIC GAMES

SECTION II: GENERAL CONDITIONS OF CONTRACT

The terms in these General Conditions of Contract for the Execution of Works for the Government of the Solomon Islands are defined as follows:

1.1 **SPECIFICATIONS AND PERFORMANCE REQUIREMENTS:** a document attached to the Contract which, when initialled by both parties, forms part of the Contract.

1.2 **DOCUMENTATION:** the manuals or other user instructions accompanying the installations and equipment included as part of the Works, in English or another language agreed between the Parties.

1.3 **EXECUTION OF WORKS:** these General Conditions of Contract for the Execution of Works, which apply to and form part of the Contract.

1.4 **INSPECTION:** the inspection of the Works for visible defects and non-conformity carried out at the Client's request on the Contractor's site prior to Delivery.

1.5 **CLIENT:** The Government of the Solomon Island or any other Government agency using these General Conditions of Contract for the Execution of Works.

1.6 **CONTRACTOR:** The Client's counterparty.

1.7 **DELIVERY:** the delivery of the Works referred to in Article 3.1, including its assembly or installation in accordance with the requirements set out in the Contract.

1.8 **CONTRACT:** the written agreement between the Client and the Contractor to which these Purchasing Conditions are declared to be applicable.

1.9 **PARTY:** The Client or the Contractor, depending on the context.

1.9 **WORKS:** the description of the activities to be implemented by the Contractor, including equipment to be delivered and installed by the Contractor under the Contract.

1.10 **EQUIPMENT:** the equipment which the Contractor has included in his Works as part of this Contract.

1.11 The **Project Manager** is the person named in the Special Conditions of the Contract (SCC) (or any other competent person appointed by the Client and notified to the Contractor, to act in replacement of the Project Manager) who is responsible for supervising the execution of the Works.

1.12 The **Contract Administrator** is the Person named in the Special Conditions of the Contract (SCC) or any other person present at the office administering the Contract.

Article 2 Application

2.1 Amendments or additions to the Contract or changes from certain Contract Conditions are binding only if they have been explicitly agreed in writing between the Parties.

2.2 In the event of inconsistency between this text of these Contract Conditions and translations of them, this text always prevails.

PERFORMANCE OF THE CONTRACT

Article 3 Delivery

3.1 Unless agreed otherwise in writing, Delivery of the Works, specified by the Client in the Technical Specifications and Scope of Works, and quoted for by the Contractor will take place on the agreed delivery date(s) or within the agreed delivery period(s) at the

delivery location specified by the Client, and the Contractor will bear all costs and risks connected with the delivery of the Works, including, where applicable, the import duties and responsibility for complying with the associated formalities.

3.2 The agreed delivery date(s) or period(s) are fixed and final. If the Works are not delivered at the agreed location within the agreed period, the Contractor will be in default without notice of default being required.

3.3 Delivery of the Works earlier than the agreed delivery date(s) or period(s) will take place only after prior written consent has been obtained from the Client and will not alter the agreed payment date.

3.4 The Client has the right to defer Delivery unless this would place a disproportionate burden on the Contractor. The Contractor is obliged to maintain the Works for the Client at no additional cost until the deferred Delivery date, unless this would place a disproportionate burden on the Contractor, in which case the Parties will hold discussions to find a reasonable arrangement acceptable to both Parties. The provisions of Articles 3.2, 3.4 and 14 apply to the Delivery deferred by the Client, except that the Contractor will be in default, without prior notice of default, only after the deferred delivery date(s) or period(s) have been exceeded.

Article 4 Guarantee

4.1 The Contractor guarantees that the delivered Works complies with the Specifications and Performance Requirements the Contractor has been bidding against and which have been accepted by the Client by issuing this Contract, is free of defects and is suitable for the purpose for which the Works are intended. The Works does not comply with the Contract if the Works does not have the characteristics the Client might expect based on the Contract.

4.2 If the Client has not provided a more detailed description of the requirements to be delivered by the Contractor, the Works should in any event be of good quality and meet at least the Construction and Building standards as applicable in the Solomon Islands, customary requirements concerning soundness, fitness for purpose and workmanship, and all requirements and customary industry regulations concerning quality, safety, health and the environment.

4.3 The Client may no longer refer to the fact that the Works does not comply with the Contract if it has not notified the Contractor accordingly in writing within 60 days of discovering this fact. If the Contractor receives such a notification from the Client, the Contractor will rectify the defect or non-conformity within a period set by the Client in accordance with the provisions of Article 13.

4.4 The Contractor guarantees that the delivered Works is free of any special encumbrance or restriction that the Client has not accepted explicitly and in writing. The Contractor indemnifies the Client against all claims in this regard.

4.5 The Client may demand that, as security for compliance with, inter alia, the Contractor's Defects Liability Period obligations under this Contract, a guarantee may be required in a form of a Bankers Guarantee through a bank accepted by the Client.

4.6 The Client may demand that, as security for the completion of the Contract, and the Contractor's performance obligations under this Contract, a Performance Guarantee in the form of a Bankers Guarantee through a bank accepted by the Client.

4.7 The Contractor guarantees the delivery of spare-parts for the equipment delivered under the performance of his contract for the duration of the technical or economical lifespan of the equipment quoted. Special requirements regarding the provision and availability of spare-parts may be requested at time of tendering.

Article 5 Inspection

5.1 At the Client's request, the Works may be regularly inspected by the Client, or a third party designated by the Client during the execution of the Contract. However, the Client is not obliged to carry out such an Inspection.

5.2 If the Client wishes to inspect the Works:

a. the Contractor will allow the Client, or a third party appointed by the Client full access to the location where the Contractor is executing the Contract.
b. the Contractor will, upon request and at no cost to the Client, cooperate with the Inspection and facilitate the Client or a third party appointed by the Client at the location and reasonable assistance in terms of staff and materials.
c. the Inspection, if the Contractor so desires, will take place in its presence or in the presence of an expert designated by the Contractor. The associated costs will be borne by the Contractor.

5.3 If the Client rejects the Works to be delivered, the Contractor is obliged, without prejudice to all other rights or claims of the Client, to rectify without delay, at its own expense and risk, the defects and notify the Client when the Works are ready for a new Inspection. The provisions of Article 5 apply in full. Rejection by the Client during the first or previous Inspection will not lead to the agreed delivery period being extended.

5.4 The approval of the Works by or on behalf of the Client does not include any approval that the Works complies with the guarantees given in accordance with Article 4.

RELATIONS BETWEEN THE PARTIES

Article 6 Contacts

6.1 Each Party will appoint a contact person to maintain contacts in relation to the performance of the Contract. The Parties will notify each other in writing of the person they have appointed as their contact.

6.2 The contacts may represent and bind their Parties, unless the Contract provides otherwise.

Article 7 Method of Notification

7.1 All notifications given by the Parties on the basis of the Contract must be in writing.

7.2 Oral communications, undertakings or agreements have no legal force unless confirmed in writing.

7.3 'In writing' is understood to include 'electronically', provided:

a. the notification can be consulted by the addressee.
b. the authenticity of the notification is sufficiently guaranteed; and
c. the identity of the sender can be determined with sufficient certainty.

Article 8 Confidentiality

8.1 The Contractor will not disclose in any way any information that is provided by the Client or that is made known to it or comes to its knowledge, which it knows or may

reasonably suspect to be confidential, except in so far as it is compelled to disclose such information under a court ruling.

8.2 The Contractor will pass-on the duty of confidentiality referred to in this article on all staff or sub-Contractors it engages in the performance of the Contract and will ensure that this duty is observed.

8.3 The Contractor will not issue press releases or make other public statements about the Contract except with the prior consent of the Client.

8.4 If the Contractor breaches its duty of confidentiality, the Client may impose a penalty, as laid down in the Special Conditions of Contract. Payment of the penalty, which is payable forthwith, does not discharge the Contractor from its liability for indemnifying any loss caused by the breach.

FINANCIAL PROVISIONS

Article 9 Prices

9.1 Unless agreed otherwise in writing, the price(s) agreed for the Works include the costs of transport, taxes, and import duties, other levies, insurance, packaging costs, incidental services, disposal costs and any assembly or installation costs.

9.2 The prices for the Works are fixed, unless the Contract specifies the circumstances that may lead to a price adjustment and the way such an adjustment should be made.

Article 10 Invoicing and payment

10.1 The Contractor will invoice the Client for the delivered Works at the agreed milestones and at the agreed prices in accordance with the Price Schedule. The Contractor will send the invoice to the address specified by the Client, stating the date and number of the Contract and other details requested by the Client.

10.2 The Contractor will send the invoice in hard copy so that it can be received and processed in accordance with the specifications issued by the Client.

10.3 The right to payment arises upon Delivery of agreed milestones or after Delivery of the Works, unless the Contract provides otherwise. The Client will pay the price for the delivered Works within 30 days of receiving the invoice if it satisfies the provisions of the Contract. The Client has the right to offset invoice amounts owed against amounts that the Contractor owes the Client.

10.4 The Client may withdraw retention payment from the Contractors milestone payments. The total sum of the accumulated retention payment shall be released after satisfactory performance after the Defects Liability Period and upon verification by the Client.

10.5 Payment of an invoice by the Client does not recognize that the Works is in conformity with the guarantees given in accordance with Article 4.

10.6 In case payment is subject to SIG tax law, all taxes applicable will be deducted from the invoice before payment.

Article 11 Advance

11.1 If it has been agreed that, for the purpose of performing the Contract, the Client should make an Advance Payment prior to the start of the Works, the Contractor will issue the Client with an Advance Payment bank guarantee in advance of making the payment to the Contractor. This Advance Payment bank guarantee issued by the Contractor will

cover the value of the Advance Payment. The Client is not required to pay any of the cost of the guarantee.

11.2 The '*Advance Payment Guarantee*" will be issued by a bank approved by the Client, in accordance with the model attached to the Standard Bidding Documents.

11.3 The Client may allow the Contractor to claim Milestone payments and allow an offset of the Advance Payment to the milestone payments.

NON-PERFORMANCE AND DISSOLUTION

12. Penalty

12.1 If the Works have not been delivered within the time limit agreed, the Contractor will owe the Client an immediately payable penalty of 0.1% of the price of the Contract for every day the failure persists, subject to a maximum of 10% of that price. If Delivery has become permanently impossible for reasons other than force majeure, the Contractor will immediately be liable for the full penalty of 10% of the price of the Works in question.

12.2 The penalty is payable to the Client without prejudice to all its other rights or claims, including:

a. its right to demand that the Contractor fulfil its agreed obligation to deliver the Works (in so far as this has not become permanently impossible);

b. its right to compensation.

12.3 The penalty will be set off against the amounts owed by the Client, irrespective of whether the rights to such amounts have been assigned to a third party.

Article 13 Non-performance

13.1 If the delivered Works or the equipment incorporated into the Works does not comply with the guarantees referred to in Article 4, the Client may demand that the Contractor repair or correct the Works. The associated costs will be borne by the Contractor.

13.2 If, after receiving a written demand from the Client, the Contractor fails to comply, within the period stipulated therein, with a requirement as referred to in paragraph (13.1), the Client has the right, without prior recourse to the Courts, to choose between:

a. replacement of the Contractor or replacement/repair of the Equipment incorporated into the Works by a third party at the Contractor's expense;

b. replacement of the Contractor or return of the Equipment incorporated into the Works at the Contractor's expense and risk and dissolution of the Contract in accordance with the provisions of Article 16 and, in consequence, crediting of however much of the purchase price has already been paid for the Works in question.

13.3 The provisions of paragraphs (13.1) and (13.2) do not affect other rights and claims that the Client may derive from non-performance.

Article 14 Liability

14.1 A Party who fails to meet its obligations is liable to the other Party for any loss incurred by the other Party.

14.2 The Contractor indemnifies the Client against any third-party claims for damages resulting from a failure as referred to in paragraph 1.

Article 15 Force Majeure

15.1 In the event of temporary force majeure, the Contractor will immediately notify the Client in writing after the circumstances bringing about force majeure have occurred, stating the cause of the force majeure. The Client then has the right to choose between:

a. Allowing the Contractor to defer compliance with its obligations under the Contract for a reasonable period of up to four weeks. If the Contractor is still unable to fulfil its obligations under the Contract when this time limit expires, the Client has the right to dissolve the Contract with immediate effect, without being obliged to pay compensation or any costs to the Contractor.

or

b. Dissolution of the Contract with immediate effect, without being obliged to pay compensation or any costs to the Contractor.

15.2 In the event of long-term force majeure on the part of the Contractor, the Contractor will immediately notify the Client and the Client has the right to dissolve the Contract with immediate effect out of court, without being obliged to pay compensation or any costs to the Contractor.

15.3 The term 'force majeure' is in any event understood not to include: staff shortages, strikes, staff illness, shortages of raw materials, transport problems, breach of obligations by Contractors, failures in the Contractor's production process and liquidity or solvency problems on the part of the Contractor, or failures on the part of third parties engaged by the Contractor.

Article 16 Dissolution

16.1 Without prejudice to the other provisions of the Contract, either Party may dissolve the Contract in full or in part out of court by registered mail, without being obliged to pay any compensation to the other Party, if the other Party is in default or compliance is temporarily or permanently impossible.

16.2 In the event of force majeure, the Client has the right to dissolve the Contract in accordance with the provisions of Article 15.

16.3 The Client may dissolve the Contract with immediate effect out of court by registered mail, without being required to send any demand or notice of default, and without being obliged to pay the Contractor any compensation, if the Contractor applies for or is granted a provisional or definitive suspension of payments, files for bankruptcy, is declared bankrupt, if its business is wound up, if it ceases trading, if a substantial proportion of its assets are seized, if it is deemed on any other grounds to be no longer capable of fulfilling its obligations under the Contract, if bribery or conflicts of interest as referred to in Article 21 occur, or if the Contractor undergoes a merger or division.

16.4 If the Contract is dissolved, the Contractor will repay the undue amounts already paid to it by the Client. If the Contract is partially dissolved, the Contractor is obliged to repay only the payments relating to the dissolved part.

Article 17 Retention of right to demand compliance

17.1 If one of the Parties fails to demand compliance with any provision within a time limit set by the Contract, this will not affect its right to demand compliance at a later date, unless the Party in question has expressly accepted the non-compliance in writing.

MISCELLANEOUS

Article 18 Documentation

18.1 The Contractor will provide the Client with clear, adequate "*as build*" drawings of the Works as finally implemented and full documentation, drawn up in English or another agreed language, on the characteristics and functionalities of the Equipment included into the Works.

18.2 The Client has the right to publish and reproduce the Documentation solely for the users envisaged by the Contract.

18.3 The Contractor indemnifies the Client against claims that third parties might enforce on the ground of a copyright accruing to them in relation to the Documentation.

Article 19 Assignment of rights and obligations under the Contract

19.1 Neither Party is entitled to transfer rights and obligations arising from the Contract to third parties without the written consent of the other Party. The other Party will not withhold its consent without reasonable grounds. It may attach conditions to its consent.

19.2 Paragraph (19.1) does not apply to the establishment of limited rights, such as the right of pledge.

Article 20 Insurance

20.1 The Contractor has taken out and will retain adequate insurance cover for business related liability, including 3rd party liability, Workmen's Compensation, as identified in the Special Conditions of Contract.

20.2 At the Client's request, the Contractor will immediately present either the original or a certified copy of the policies and proof of the payment of premium for the insurance referred to in paragraph 1, or a statement from the insurer to the effect that the insurance exists. The Contractor will not terminate or alter the insurance contract without the Client's prior written consent. The Contractor has no right to change the insured sum to the Client's disadvantage without the Client's prior written consent. The insurance premiums owed by the Contractor are deemed to be included in the agreed prices.

20.3 The Contractor assigns to the Client in advance all rights to the payment of insurance proceeds as referred to in paragraph 20.1, in so far as such proceeds relate to damage for which the Contractor is liable to the Client under the Contract. The Contractor is obliged to notify its insurance company in writing of this assignment and to send a copy of this written notice to the Client, without prejudice to the Client's right to notify the insurer itself. Any insurance proceeds paid directly by the insurer to the Client will be deducted from the amount of compensation the Contractor is required to pay to the Client in respect of the insured event.

SECTION III: SPECIAL CONDITIONS OF CONTRACT

The following Special Conditions of Contract shall supplement the General Conditions of Contract for the Execution of Works for the Solomon Islands Government. Whenever there is a conflict, the provisions herein shall prevail over those in General Conditions for the Execution of Works (GCC). The corresponding Article numbers in the General Conditions of Contract are indicated below.

<table>
<tr><th>GCC Article</th><th>No.</th><th>Particulars</th></tr>
<tr><td rowspan="3">1. Definitions</td><td>1.5</td><td>a. THE CLIENT IS:

National Hosting Authority
Solomon Islands Government
P.O. Box 2443
Honiara,
Solomon Islands

b. THE CONTRACTOR:

RJ & ASSOCIATES COMPANY LIMITED
P.O. Box R12
Honiara-Solomon Islands
Email: rejack36@gmail.com
Mob: 677-7463888

c. THE LOCATION SITE IS:
NSC Land, Burnscreek, East Honiara</td></tr>
<tr><td rowspan="2">1.12,
1.13</td><td>• THE CLIENT'S PROJECT MANAGER IS:
Graham Lilo
Project Management Unit
National Hosting Authority
Email: GLilo@sol2023.com.sb</td></tr>
<tr><td>• THE CONTRACT ADMINISTRATOR IS.
Soleana Gagahe
Contracts Manager
Project Management Unit
National Hosting Authority
Email: SGagahe@sol2023.com.sb

• CONTRACTOR'S PROJECT MANAGER
Jack Resture Jnr
Project Manager
RJ & Associates Company Limited
P.O. Box R12</td></tr>
</table>

		Honiara-Solomon Islands Email: rejack36@gmail.com
3. Delivery of the Works	3.1	The Works shall be completed within 90 *days* from the Contract Commencement date. **Note:** *For this Contract, a six-day working week is assumed. Therefore, the Works shall be completed within weeks of commencement of the Contract. The Contract commences on the day that it has been signed and countersigned by all parties to the Contract.*
4. Guarantee	4.5	The Defects Liability Period shall be one month, for quality of workmanship, from the date of acceptance of the Works. The Contractor shall, in addition, comply with the performance as specified in the Contract. If for reasons attributable to the Contractor these guarantees are not attained in whole or in part, the Contractor shall, at its discretion, either: a) make such changes, modification, and/or additions to the Works or any part thereof as may be necessary in order to attain the contractual guarantees specified in the contract at its own cost and expense
	4.6	This Contract must be supported by a duly signed Performance Securing Declaration, acceptable to the Client, in lieu of a Performance Security. The Performance Securing Declaration is at *Section VII: Annex II* (page 38) of the Contract.
5. Inspection	5.1	Inspection and tests by the Client or 3rd party in name of the Client regarding the Execution of the Works and the quality levels applied to may be implemented as follows: • The time limit for inspection and quality assurance may be always undertaken during the Execution of the Works. There is no need for the Client or their representative to announce their inspection beforehand.
6. Contacts	6.1	**THE CLIENT'S AUTHORIZED REPRESENTATIVE FOR THIS CONTRACT IS.** Leeroy Bird Executive Director Project Management Unit Email: LBird@sol2023.com.sb **THE CONTRACTOR'S AUTHORIZED REPRESENTATIVE IS:** Jack Resture Jnr Project Manager RJ & Associates Company Limited

		P.O. Box R12 Honiara-Solomon Islands Email: rejack36@gmail.com
9. Prices	9.1	The Contract price is fixed for the duration of the Contract.
	9.2	Variations of the Contract price may be granted by the employer provided the request for variation is made prior to the work being undertaken, and the variation is assessed by the Employer to be necessary and the price quoted is reasonable.
10. Payment	10.1	a) Payment for Works carried out under this contract shall be made in SBD. The Contractor is to submit a claim for Works completed. The Project Manager is to inspect the Works and if in grievance with the Contractor authorise payment of the claim. b) If there is a difference between the assessed Works complete and the claim amount the Contractor is to adjust the claim to match the value of the completed Works. c) Payment for milestone completion shall conform to the payment schedule as in section III of the Contract.
	10.6	In case payment is subject to SIG tax law, the latest information on the relevant withholding taxes and other payables are to be found at the website of the Inland Revenue Department: http://www.ird.gov.sb
11. Advance Payment	11.1	The first scheduled payment shall be the Mobilization Payment which shall be paid after the project has mobilized, materials have been delivered to site and work is ready to commence.
12. Penalty (Liquidated Damages)	12.1	Applicable rate for the Liquidated damages is: 0.1% per day.
14. Contractor's Liability	14.1	Notwithstanding Article 14.1 of the GCC, the Contractor's liability is twice the Contract value as stated in the Contract between Client and Contractor.
20. Insurances	20.1	Contractor shall provide with their tender to following proof of insurance:

		- Workmen's Compensation	As required by SI Law
		- Third Party Liability	SBD 2,000,000
		- Equipment for use in Project	Replacement Value

SECTION IV: PAYMENT SCHEDULE

This Payment Schedule is part of the Contract and is crucial part of which the Contractor shall be remunerated. This Schedule is referred to the Contractor's milestones and claims. If there are any inconsistencies of milestones claims from the Contractor, these milestones and Payment Schedule stated herein supersedes such Contractor's claims.

CONTRACT VALUE			SBD$3,212,632.13
PAYMENT NUMBER	**MILESTONE DESCRIPTION**	**AMOUNT CLAIMED**	**AMOUNT DUE PAYABLE**
Payment No. 1	Mobilization (50%) Payment shall be made prior to contractor's mobilization to site, site clearance and commencement of works.	**$1,606,316.07**	**$1,606,316.07**
Payment No.2	Progress payment of 45% shall be made upon completion of all works as required	**$1,445,684.46**	**$1,445,684.46**
Payment No. 3	5% Retention payment shall be made one months after completion and acceptance of retention rectification certifications.	**$160,631.61**	**$160,631.61**
TOTAL			**$3,212,632.13**

SECTION V: SCOPE OF WORKS/ SPECIFICATIONS

1. PROJECT BRIEF

NHA is now seeking suitably qualified firms or individuals to tender for FENCING WORK AT THE NATIONAL SPORTS COUNCIL LAND AREA AT BURNSCREEK. Works will be separated into individual contracts which will comprise of:

- LOT 1: Fencing of 2.5km x Picket Fence at the NSC Land Burnscreek

1.1 Location

All earth works shall be performed at the site as shown in the drawing below;

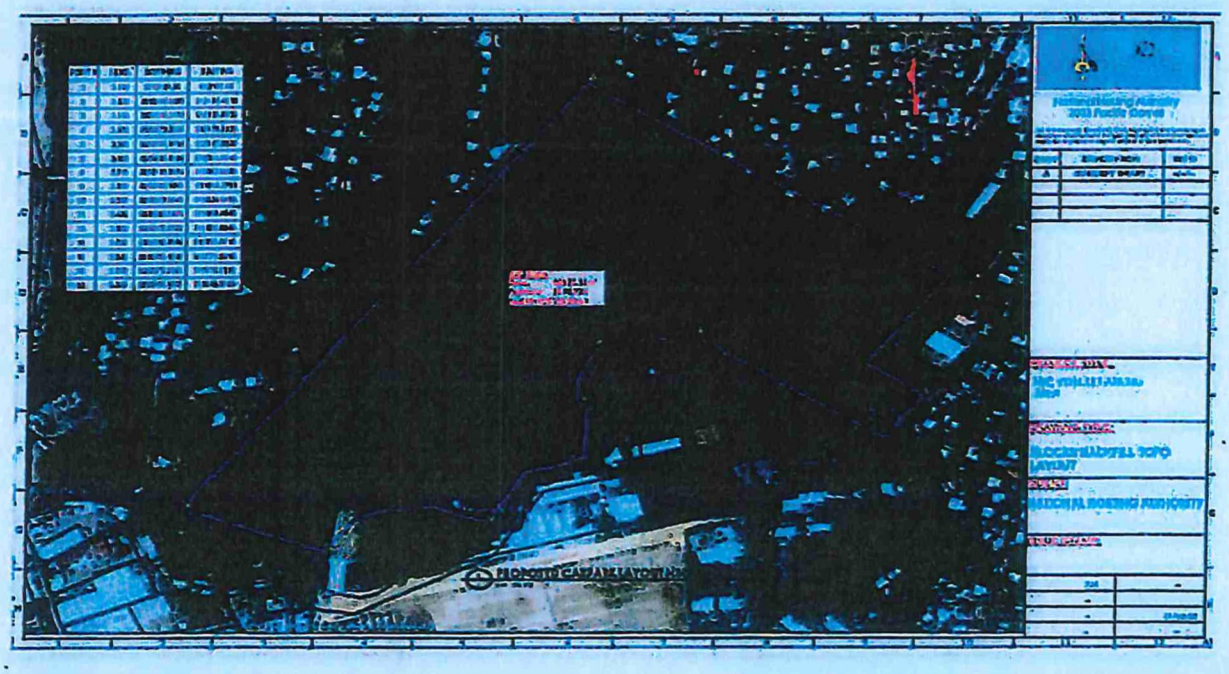

SPECIFIC SCOPE OF WORKS

The work to be performed under this contract shall consist of furnishing all plans, equipment, materials, supplies, and manufactured articles, and for furnishing all transportation and services, including fuel, power, and essential communications, and forthe performance of all labor, work, or other operations required for the fulfillment of the Contract in strict accordance with the specifications as herein defined.

PROJECT SITE:

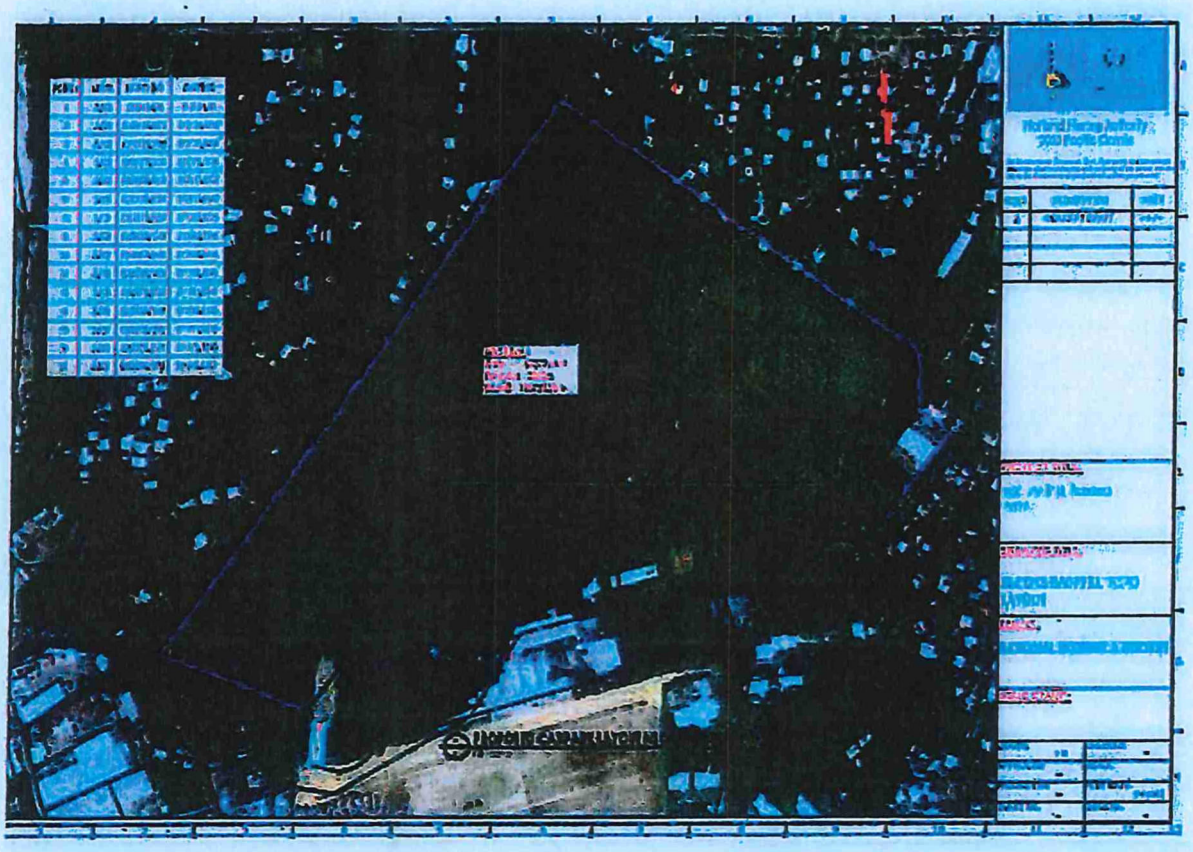

Depicted above is the site proposed for fencing

DRAWINGS

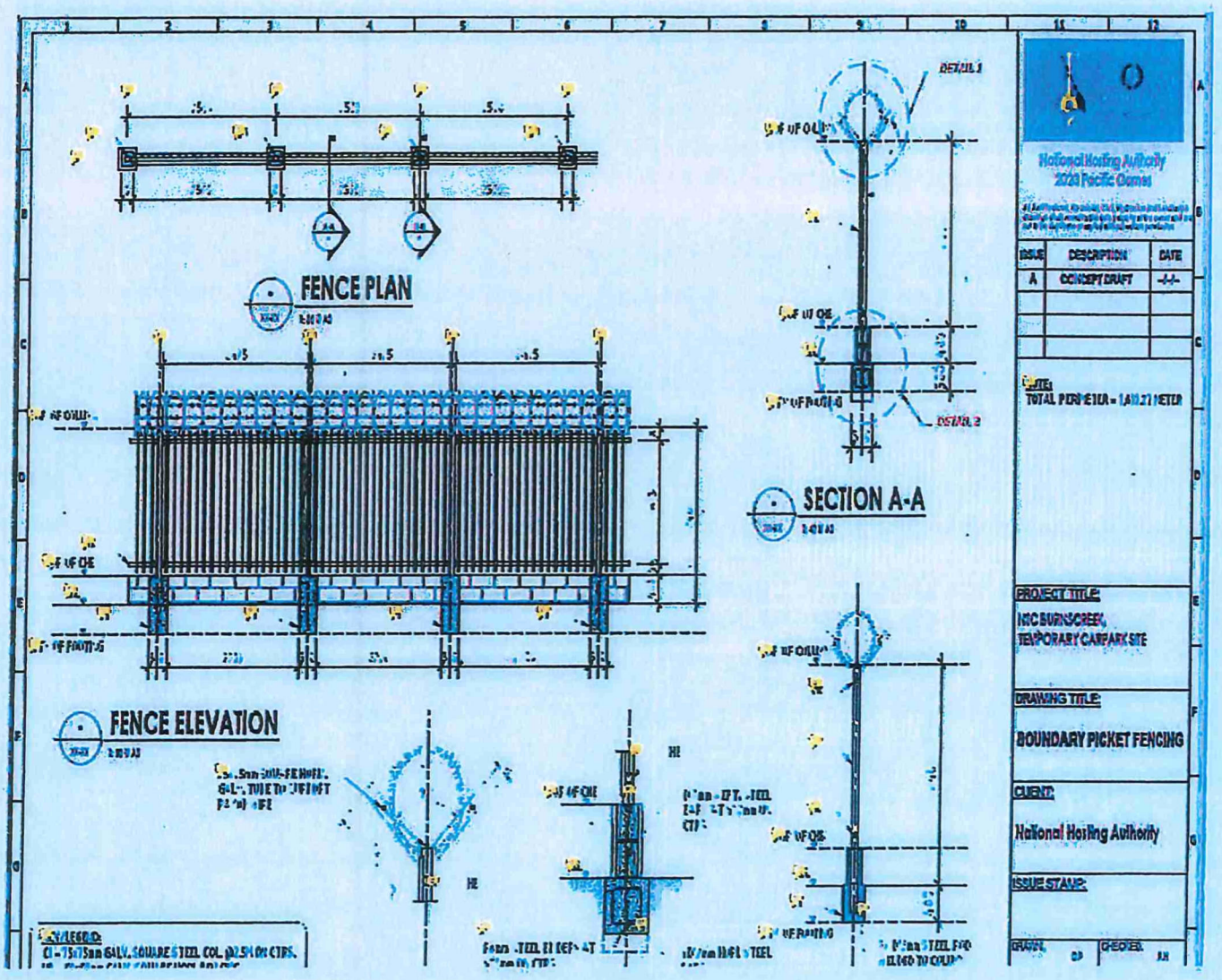
FENCE PLAN
FENCE ELEVATION
SECTION A-A
DETAIL 1
DETAIL 2
National Hosting Authority
2023 Pacific Games
ISSUE
DESCRIPTION
DATE
A
CONCEPT DRAFT
NOTE:
TOTAL PERIMETER = 1411.27 METER
PROJECT TITLE:
NIC BURNS CREEK
TEMPORARY CARPARK SITE
DRAWING TITLE:
BOUNDARY PICKET FENCING
CLIENT:
National Hosting Authority
ISSUE STAMP:
DRAWN
CHECKED

PRE-WORK PREPARATIONS

- While a building department permit is not required for this project, thecontractor should secure any necessary encroachment permits.
- The Contractor should secure an area on the properties to park trailers,vehicles, or any other equipment, and to place portable toilets.
- Contractor shall ensure there is electricity available on site.

SITE PREPARATIONS

- The contractor shall make sure that any shrubs or other obstructions arecleared from the fence path.
- The contractor will demolish and dispose of all existing fences:
- All pressure treated lumber must be disposed of properly.
- All old fence posts must be removed completely.
- All boards, nails, and debris must be cleaned up.
- The Contractor shall ensure that any ground that is getting dug into is clear of any utilities, wires, or pipes.

EXCAVATION

The contractor shall ensure that excavation for pad and strip footings conform to the details as in the drawings where the depth of pad footing is 400mm x 300mm with strip footing for block work is 300mm depth and 300mm width for fence foundation.

REINFORCEMENT

The Contractor shall ensure that all reinforcement for footings is D12 or 12mm rough steel reinforcements as in the drawings with stirrups as required.

CONCRETE FOOTING

Concrete shall be of 25Mpa with required quantities as in the bills of quantities.

BLOCK WORK

Contractor must build two layers of blocks of 16-inch size prior to bottom fence framing for fence panels.

FENCE POSTS

Contractor must use 75mm square posts of 2200mm spacing with top welded "Y" allow for installation of Razor Barbed wire. Any portions of the fence that are on sidewalks or retaining wall shall be mounted with surface mounting brackets with appropriate concrete anchors.

FENCE INSTALLATION AND SPECIFICATIONS

The fence shall be of 25mm square tube welded across 2000 meters as specified in the drawings.

GATES

Contractor must use 100mm square posts at the bridge linking the area and install double gate with industrial hinges and locks.

CLEAN UP

The Contractor will be responsible for all cleanup of the job site to a"broom clean" status.

If there are any areas of concrete that are stained with dirt, paint, or any other substance from construction, the Contractor will be responsible forcleaning stains to where it is free of any visible sign.

The Contractor will be responsible for reinstalling any items that wereremoved from building for the purposes of construction unless other arrangements have been made and agreed upon with NHA.

The Contactor will remove and dispose of all trash and excess unusablematerials.

The Contractor will remove all tools, equipment, drop cloths/tarps, trash(produced by Contractor), and any other items that were put there by theContractor.

MATERIALS AND EQUIPMENT

The Contractor shall supply all necessary materials, fasteners, hardware,concrete, wood, and any other items necessary to complete the project.

The Contractor shall use his/her own equipment and shall provide allnecessary tools and materials to complete the job as described.

GENERAL PROJECT AND WORKS REQUIREMENTS

1 Preliminary & General

The Contractor will be responsible for the following:

- Provision of all material and labor on site.
- High quality of workmanship and finishes by appropriately qualified personnel.
- Maintenance of site access and site storage.
- Provision of all temporary site service including, but not limited to; water, electricity, site sanitation etc.
- Protection of all works.
- Provision of site office and site storage to suit the Contractor's personnel needs.
- Connection of all permanent services to the works.
- Site cleanliness and tidiness for maintenance of safety and environment.

1.1 Health and Safety

The Contractor is to ensure safety of all personnel and the public whilst on site. It is mandatory for the Contractor to submit a Work Safe Method Statement before commencing any works on site. The Work Safe Method Statement is to be reviewed and approved by the Employer. To a minimum the following criteria must be met;

1.2 OPERATION HEALTH & SAFTEY

The Contractor is to ensure safety of all personnel and the public whilst on site. It is mandatory for the Contractor to submit a Work Safe Method Statement before commencing any works on site. The Work Safe Method Statement is to be reviewed and approved by the Employer.

2. GENERAL SAFETY REQUIREMENTS

The contractor must put controls in place to eliminate, isolate or minimize all hazards. General hazards include;

- General public
- Heavy plant (trucks reversing, excavators)
- Deep excavations
- Falling objects
- Hot works
- Working at height

2.1 PROTECTIVE EQUIPMENT (PPE)

Contractor's personnel or any visitor on site must comply, at a minimum, with the following;

Safety boots/ Footwear	Steel cap boots to be worn at all times
High Visibility (HV) Clothing	HV jacket or vest to be worn at all times.
Head Protection	Hard hat to be worn when working under falling hazards (cranes, scaffolding, double-storey structure)
Hearing Protection	Hearing protection is to be used when operating or in the vicinity of noisy equipment.

3. SPECIFIC SAFETY REQUIREMENTS

Equipment	The Contractor is to nominate the equipment to be used on site. A detailed equipment list is to be submitted as part of the Contractors tender submission. All equipment is to be in safe and working order and must all have current licenses where appropriate. Vehicles are to be operated by qualified or adequately trained personnel.
Ladders	Must be available on site and in good condition and fit for industrial use.
Scaffold	Must be in good condition and adequately assembled by trained personnel
Power Tools	Tools on site must be serviced, in good condition and adequate for the task/job carried out.
Electricity	Any works that involve the use of electricity, including temporary power during works, is to be carried out be a suitably trained and certified electrician.
Fencing	Contractor is to separate construction area from general public areas using fencing or barrier tape. The site should be a distinct isolated work area. All hazards such as open excavation also need to be clearly marked or fenced.
Signage	Contractor to erect appropriate warning signage at work site. A project signboard is to be installed at the site entry at the commencement of works. Project sign board needs to be approved by Employer's representative prior to erection.
Storage	Materials are to be stored in an appropriate and safe manner; and in accordance with any relevant material safety data sheet (MSDS).
Waste	All waste is to be collected and moved to a location identified and approved by Employer's representative as a waste disposal area.
Ablution	The Contractor should provide adequate ablutions for all personnel or visitors on site. Ablutions must be cleaned on a regular basis to maintain adequate hygiene standards.
Access	Site must have a designated entry and exit point. The entry and exit point should be clearly signed and located to provide minimal disruption to the public.
Authorised Personnel	Only authorised personnel allowed on site – appropriate signage must be in place to communicate this.
Evacuation Plan	An emergency evacuation and management plan must be in place

	and made known to all on site.
Fire fighting	Fire extinguishers must always be available on site and positioned in areas for ease of access in emergency.
First Aid	A first aid kit must always be available on site. The Contractor is to ensure that at least two of the Contractor's personnel on site at any time are adequately trained and certified in First Aid.
Emergency Response	Emergency response (Police, Ambulance, Fire Brigade) numbers must be available and displayed on site in event of an emergency.
Drug & Alcohol	No smoking, alcohol consumption or chewing of betel nut is permitted by the Contractor or staff. No illicit drug of any type are to be present or in use on site.
Child Protection	Children are not allowed on site at any time and no worker is ever to accompany a child on site without the expressed approval of the Employer's representative.

4. QUALITY

The Contractor is to ensure a Quality Management System (QMS) is maintained throughout the duration of the Works. To a minimum the QMS must ensure the following is maintained.

- Quality management plan.
- Quality management records (testing records, compliance certificates).
- Internal quality audits.
- Nonconformance and corrective actions list.

The Contractor must present the QMS and Quality management plan to the Employer's representative for approval before the Works can commence.

5. ENVIRONMENT

Environmental measures for the project are to include:

- All waste is to be removed from site and disposed of as per Local Authority requirements.
- No waste is to be burnt on site.
- Protective measures must in place to ensure that no run off from the site goes into nearby
- waterways.
- Any spill of chemicals, diesels or hazardous materials are cleaned up immediately.
- All hazardous materials are stored in a safe place and in a way that spillage will not

harm the environment.

6. PROJECT ADMINISTRATION

Authorized Representative	The Contractor must nominate an authorized representative for all external communications. The authorized representative must be suitably qualified and fluent in the language of English. All communications between parties should be in English.
Pre – Start Meeting	A prestart meeting will be held at the site prior to the commencement of the Works. The objective of the prestart meeting is to confirm the project outcomes, responsibilities and relationships for the project. Attendees at the meeting are to include representatives of the Contractor, Employer and relevant authorities.
Project Meetings	Project Meetings should be held on a fortnightly basis during the contracted period of Works. Attendees should include representatives of the Contractor and Employer. Project meetings may also be held as required at the request of the Employer or the Contractor.
Project Reporting	The Contractor is to submit weekly and monthly project reports and summaries. These reports should detail to a minimum: • Project progress and timeline update • Key issues and blockages • Pending approvals • Safety summary • Quality summary • Equipment summary • Staff records • Photographic records • Project Finance update
Payment Claims	Payment Claims are to be presented to the Employer's Representative /Project Manager whenever work associated with a milestone payment has been completed. Proof of completion of the milestone in the form of a monthly site report showing the completed work and a statement from the Contractor must accompany the Payment Claim. Payment Claims will be reviewed by the Employer's representative/Project Manager for approval. Once approval has been provided the Contractor can submit an invoice for payment.
Work Hours	Work hours are generally to be 8.00am to 5.00pm Monday to Friday. Extended work hours can be requested by the Contractor and approval provided by the Employer's representative.

7. Earthworks

Earthworks is to include, but not limited to, all clearing and grubbing, excavation, trenching, shoring, backfilling, removal of spoil material and placement of fill material. All excavation is to be conducted in a safe manner using nominated equipment. All equipment used in excavation is to be nominated in the Contractor's Safe Work Method Statement.
All excavation related activities on site are to be compliant with design documentation and approved by the Employer's representatives.

Clearing and Grubbing

Clearing and grubbing operations shall be carried out in the following areas as relevant:

- Areas where general earthworks are to be constructed, plus a margin of 3m or to property boundaries; whichever is the lesser.
- Areas specified for visibility.
- Other areas as indicated on the drawings.

Disposal of Cleared and Grubbed Materials:
Materials that comply with the requirements specified may be used in the Works, otherwise the material shall be removed from the Site or if approved, be disposed within the Site.

Excavation Dewatering Allow to drain all foundation excavations to special low-level sumps, located away from the permanent works. Excavation shall remain dry for duration of the work, and prior to placing of hard fill or site concrete. Prevent all water flow over freshly laid work.

Backfilling

Bring all filling on to the site unless it can be provided from soil recovered from the site. Filling shall be sound material, free of perishable material or any material that will not form stable fill. The fill shall be the best of the clean inorganic excavated material, fully stabilised as approved by the site supervisor.

ConsolidationBackfill around all foundations with approved backfill material and compact by approved mechanical means. Place in layers of 150mm loose depth to levels shown on the foundation drawings. Consolidate each layer to at least 100% standard of the maximum dry density available at standard effort before proceeding to next layer. Materials are to be spread so as not to disturb subgrade and shall be placed in uniform layers with each layer interlocking the layer below. Placing procedures shall ensure minimum segregation.

Backfilling for Specific Structures

Under floor slabs on fill provide 150mm minimum thickness of approved crushed coral fill, blinded with a 50mm layer of sand or similar approved fine material so as to produce a surface which will not damage the damp proof membrane overlay. Hard fill shall be placed in layers not exceeding 100mm loose depth and shall be smooth wheeled roller (5 tonne), or vibrating roller with equivalent compactive effort to 100% standard of the maximum dry density. It will be noted that concrete floors will be supported off this filling.

Top Soil

Where possible stockpile topsoil for re-spreading for future landscape works as necessary.

Definitions

ROCK: Any natural or artificial material encountered in the excavation which cannot be removed until broken up by explosives or mechanical means such as, jackhammer or percussion drills.

OTHER THAN ROCK: All other material encountered in excavation.

Rubbish

Rubbish or debris is not to be buried on site. Remove all rubbish from the site.

SERVICE TRENCHES

Excavation

If practicable, make trenches straight between manholes, inspection points and junctions, with vertical sides and uniform grades.

Trench widths

Keep trench widths to the minimum consistent with the laying and bedding of the relevant service and construction of manholes and pits.

Backfilling

General: Backfill service trenches as soon as possible after laying the service. Place backfills in layers. Compact each layer to a density sufficient to minimise settlement.

Backfill material: Excavated spoil or well graded inorganic material with maximum particle size of 75 mm.

Next to services: Do not place any particles greater in size than 25 mm within 150 mm of services.
Under paved areas: Coarse sand, controlled low strength material or fine crushed rock.

Shoring

The Contractor/local builder shall shore up as necessary, and batter the faces of excavations. The stability of soil faces during excavation work will be entirely the responsibility of the Contractor who shall make good any damage which may occur as the result of soil failure.

Where excavations at different levels are adjacent, the sides of the lower excavations shall be supported in such a manner that the bearing capacity of the retained soil is not impaired.

SECTION VII: ANNEXES TO THE CONTRACT

ANNEX I: TENDER AWARD LETTER

ANNEX II: PERFORMANCE SECURING DECLARATION

ANNEX IV: CONTRACTOR'S PRICED BILL OF QUANTITIES

ANNEX V: CONTRACTOR'S INSURANCE CERTIFICATE

ANNEX VI: CONTRACTOR'S HONIARA CITY COUNCIL BUSINESS LICENSE

00055553

HONIARA CITY COUNCIL

BUSINESS LICENCE - 2024

Honiara City Council (Regulation of Business Licences)

A business licence is hereby issued for the following business (es.) in accordance with section 4(1) of the Honiara City Council (Regulation of Businesses Licences) Ordinance.

Code	Type of Business
BLC02	Building Contractors - L/O

Issued to: RJ & Associates Company Ltd

Address: P. O Box R12
Honiara
Solomon Islands

Business Name: RJ & Associates Company Ltd

Business premises location: Honiara

Licence Expiry Date: 31 st December 2024

Amount of fee paid: $4,200.00 Receipt Number: 017403

Business Licence fees are imposed pursuant to section 4 (1) of the Honiara City Council (Regulation of Business Licence) Ordinance and section 4 and Schedule 2 of the Honiara City Council (Fees Rates and Charges) 2024.

The Business Licence holder is asked to:

1. Display the licence in a prominent and easily visible place
2. Allow the licence to be inspected by Council Officers when requested
3. Notify the Business Licence Officer, Honiara City Council if or when information stated in the above licence changes

Business Registration Number 20203064

Approved by:

City Clerk

8/2/24

CERTIFICATE

ANNEX VII: CONTRACTOR'S COMPANY HAUS CERTIFICATE

the company haus

Certificate of Incorporation

(Pursuant to section 7 of the Companies Act 2009)

RJ & ASSOCIATES COMPANY LIMITED

20203064

This is to certify that RJ & ASSOCIATES COMPANY LIMITED was incorporated under the Companies Act 2009 on 30 July 2020.

Kurlah Pitamama
Registrar of Companies
30 July 2020

REGISTRAR OF COMPANIES SOLOMON ISLANDS

To check the validity of this certificate enter http://www.solomonbusinessregistry.gov.sb/sb-br-companies/verify/20203064/COMPANIES-14613501.html in your browser. Certificate generated 30 July 2020 09:42 AM SBT

ANNEX VIII: CONTRACTOR'S INLAND REVENUE TAX CERTIFICATE

IMPROVING THE LIFE OF SOLOMON ISLANDERS
Inland Revenue Division Solomon Islands

SR 100
04 October 2021

RJ & ASSOCIATES COMPANY LIMITED
White River
West Honiara
Honiara, Guadalcanal

IN: 1249666

ear Sir/Madam,

otification of Registration (RJ & ASSOCIATES COMPANY LIMITED)

e above business has now been registered with the Inland Revenue Division. Please note the
ing:

x Identification Number (TIN) – 1249666

e above named is registered for the following taxes:
Stamp Duty
Withholding Tax

TIN, (1249666), should be written on all payment forms, returns, correspondence or other
lings with IRD. The same TIN is used for all tax types (e.g. Income Tax, PAYE, Goods Tax etc.)

u have registered for Sales or Goods Tax an officer will be in contact in relation to the issuing of
cial certificates that you may require for these taxes.

u are unsure of your obligations or would like any additional information, please contact the
ayer Education Team on phone 21493 for assistance.

faithfully

Maenu'u.
ance Officer
ucation Team

ANNEX IX: CONTRACTOR'S WORK SCHEDULE

ADDENDUMS TO CONTRACT

ACCOUNTS PAYABLE SUBMISSIONS

PROGRESS REPORTS

CERTIFICATE OF PRACTICAL COMPLETION

VARIATION APPROVALS

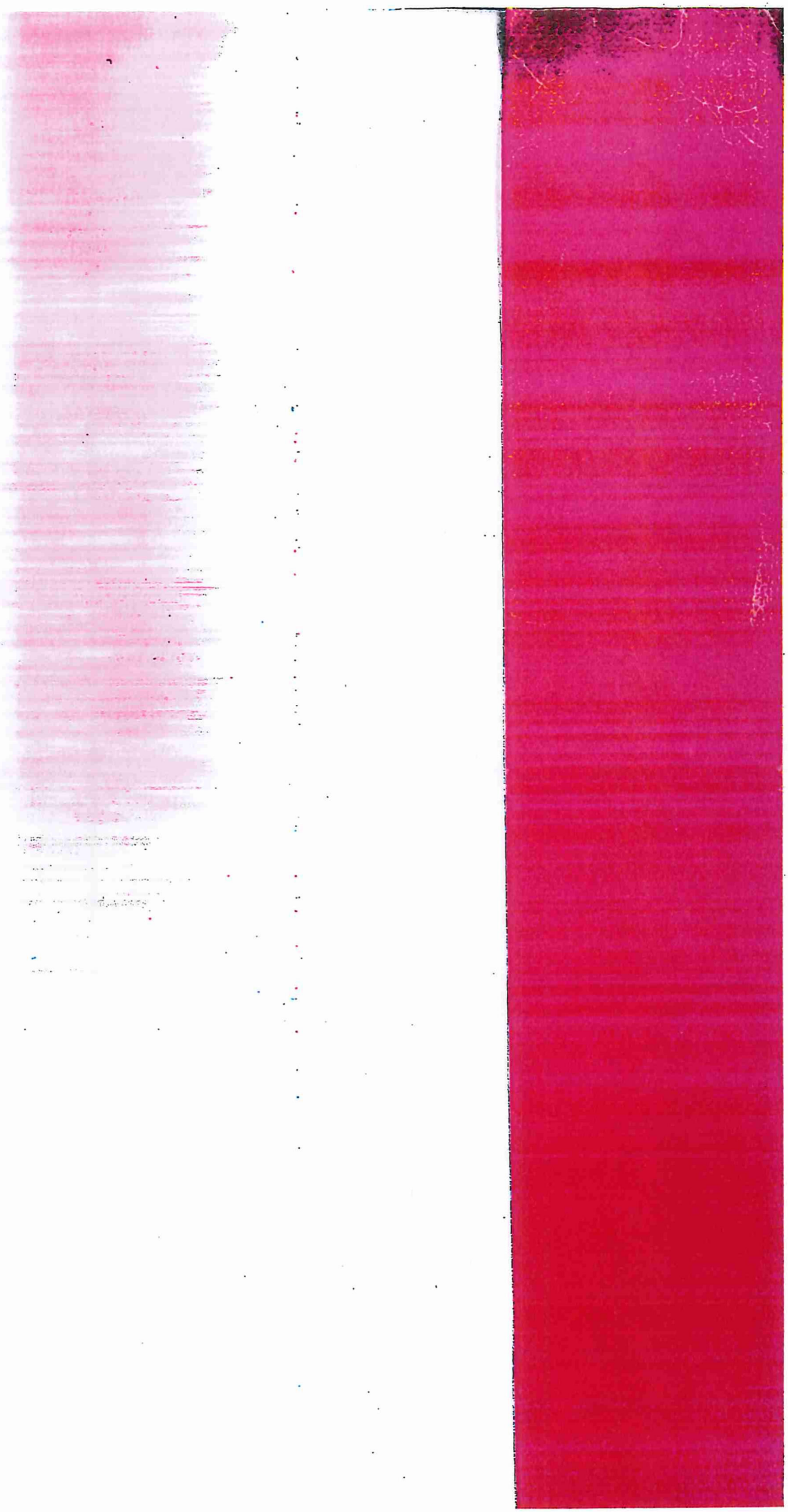

PACIFIC GAMES
SOLOMON ISLANDS

2023 PACIFIC GAMES OFFICE

Approval /Signature Required

Supplier Name: RJ & Association Company Ltd. (50% Variation)

1) Minute	☑	Sign by ED	✓		
2) Requisition	☑	Compliance Officer	_____	Sign by ED	_____
3) Payment Voucher	☐	Sign by FC	_____	Sign by ED	_____
4) LPO	☐	Sign by FC	_____	Sign by ED	_____
5) IB Authorisations	☐	Sign by FC	_____	Sign by ED	_____

Comments:

Attached contract for filing purpose
Queens - original contract Copy
- ~~CS~~ CS- form

ANZ

Australian and New Zealand Banking Group Limted (ANZ)

STAMP DUTY PAID

HONIARA, SOLOMON ISLANDS

DATE 26 07 24 (D D M M Y Y)

PAY RJ & ASSOCIATES COMPANY LTD OR BEARER

THE SUM OF SIX HUNDRED AND SEVENTY NINE THOUSAND FOUR HUNDRED AND THIRTY TWO DOLLARS 82/100

NOT NEGOTIABLE

SBD679,432.82

PLEASE SIGN ABOVE THIS LINE

PLEASE SIGN ABOVE THIS LINE

№ 1799284

NATIONAL HOSTING AUTHORITY 5691.1.1.C.

26/07/24.

NATIONAL HOSTING AUTHORITY
P O Box 2443
Honiara, Solomon Islands
E:Accounts@sol2023.com.sb

RJ & Associates Company Ltd
Honiara

PAYMENT VOUCHER	
DATE	16/07/2024

Cheque Number IB TRANS

Total Amount Paid $679,432.82

Payment being for Variation 50% for construction of picket fencing at NSC/NHA Land Burnscreek - Lot 1

In Payment For the following invoices:

Supplier Inv	Purchase No.	Invoice Date	Invoice Amount	Previous Payments	Current Payment
1045	00002145	26/03/2024	$4,330,550.36	$2,823,100.48	$679,432.82

Payment Voucher Prepared By: _____ Date: 16/07/24

Signature of Claimant: _____

PRINT NAME: Junior Kastume.

PAYMENT SCHEDULE

CONSTRUCTION FOR PICKET FENCING AT NSC/NHA LAND BURNSCREEK - LOT 1

RJ & ASSOCIATES COMPANY LTD

Payment No.	DATE		Award Amount	Retention 5%	With Holding Tax 7.5%	Amount Paid	Status
			3,212,632.13		7.50%		
No.1	27/03/2024	50%	1,606,316.07		120,473.70	1,485,842.36	Paid
No.2	11/06/2024	45%	1,445,684.46		108,426.33	1,337,258.12	Paid
No.3		5%	160,631.61		12,047.37	148,584.24	
Variation No.01	16/07/2024	50%	734,521.97		55,089.15	679,432.82	Payment in Progress
Variation No.02		50%	734,521.97		55,089.15	679,432.82	
TOTAL			*4,681,676.07*	-	*351,125.71*	*4,330,550.36*	

NATIONAL HOSTING AUTHORITY

REQUISITION NUMBER: PMU - 1356/24

DEPARTMENT: PMU

PURCHASE REQUISITION

QUANTITY	UNIT	DESCRIPTION (Full and clear details of payment)	PURCHASING OFFICER USE ONLY		
			SUPPLIER	ORDER NO.	COST
1	US	Request variation payment of $734,521.97 to RJ & Associates company LTD for additional Picket fencing at Parcel 192-002-0158 at NSC Land, Burnsereek	RJ & Associates Company LTD	Inv # ~~734,~~ 115	$734,521.97
				TOTALS	$734,521.97

Approval is requested to incur expenditure on the above

Estimated Cost (SBD): $734,521.97 Date: 08/07/24

Requisition Officer (Name): Maerick Vulan Sign:

Account Code: 6-2717

Account Name: Other Local other Cost.

Funds available on this account:

Supervisors Certification (Accountable Officers):

Certifying Officer (Name): Leeroy. Bird Sign:

Post: ED PMU

Department: PMU

Authority is granted for expenditure not exceeding:

SBD$ 734,521.97

Signed:

Name:

Note: Authority for expenditure must be given by accounting officer or his/her deligated

Threshold Checklist

Payment requires one quote (10,000 below)	
Payment requires three quotes ($10,000.00 above)	
Is it a ITB Contract Payment	
Is it a GTB Contract Payment	
Payment is a Bid Waiver	

Compliance Check by: Signature

Name: Agnes. N Date: 10/07/24

Position: Compliance.

Copy 1 White NHA Finance

Copy 2 Pink Compliance Department

Copy 3 Yellow Requesting Department

NATIONAL HOSTING AUTHORITY

REQUISITION NUMBER: PMU - 1356/24

DEPARTMENT: PMU

PURCHASE REQUISITION

QUANTITY	UNIT	DESCRIPTION (Full and clear details of payment)	PURCHASING OFFICER USE ONLY: SUPPLIER	ORDER NO.	COST
1	US	Request variation payment of $734,521.97 to RJ & Associates company LTD for additional Picket fencing at Parcel 192-007-0158 at NSI land, Buvussweda	RJ & Associates (company) LTD	Inv # ~~734~~ 115	$734,521.97
				TOTALS	$734,521.97

Approval is requested to incur expenditure on the above

Estimated Cost (SBD): $734,521.97 Date: 03/07/24

Requisition Officer (Name): Nuvick Vufar Sign:

Account Code: 6 3717

Account Name: Other Local other Cost.

Funds available on this account:

Supervisors Certification (Accountable Officers):

Certifying Officer (Name): Leoraj Bird Sign:

Post: CT PMU

Department: PMU

Authority is granted for expenditure not exceeding:

SBD$ 734,521.97

Signed:

Name:

Note: Authority for expenditure must be given by accounting officer or his/her deligated

Threshold Checklist

Payment requires one quote (10,000 below)	
Payment requires three quotes ($10,000.00 above)	
Is it a ITB Contract Payment	
Is it a GTB Contract Payment	
Payment is a Bid Waiver	

Compliance Check by: Signature

Name: Agnes N Date: 10/07/24

Position: Compliance

Copy 1 White NHA Finance

Copy 2 Pink Compliance Department

Copy 3 Yellow Requesting Department

NATIONAL HOSTING AUTHORITY
XVII 2023 PACIFIC GAMES

Ref: GL-7/1/24 Date: 1 July 2024

MEMO

To: Christian Nieng
Executive Director - NHA

..... Signature
..... Date

Thru: Leeroy Bird
ED -PMU

..... Signature
4/07/24 Date

Dear ED,

Subject: **REQUEST 50% VARATION PAYMENT TO RJ & ASSOCIATES COMPANY LTD FOR THE CONSTRUCTION OF ADDITIONAL PICKET FENCING AT PARCEL 192-007 -0158 AT NSC LAND, BURNSCREEK.**

I refer to the above, payment is requested to the aforementioned company for works done for NHA.
Particulars of payment are as follows:

No.	Description	Amount
1	Paymen 3 (50%) – 50% claim for the construction of additional picket fencing at parcel 192 -007 -0158, Burnscreek	$734,521.97
	TOTAL	**$734,521.97**

Attached are relevant documents for this payment

Kind Regards,

Graham Lilo
Project Manager –PMU
National Hosting Authority

C/-P.O. Box 2443
Honiara
Solomon Islands

Phone:
677 7308800

Facebook page:
Sol2023 XVII Pacific Games

RJ &ASSOCIATES COMPANY LIMITED

INVOICE

Date: 25/06/24
Invoice #: 115
For: 50% Claim for The Construction of additional Picket Fence at Chengs Land Burns Creek
Bill To: NHA

West Honiara
Phone: 677 7463888
Email - rejack36@gmail.com
BSP ACC# 2001204706

DESCRIPTION	AMOUNT
50% Claim for The Construction of additional Picket Fence at Chengs Land Burns Creek	$734,521.97

SUBTOTAL	$734,521.97
SALES TAX	$0.00
TOTAL	**$734,521.97**

Make all cheques payable to RJ &ASSOCIATES COMPANY LIMITED. If you have any questions concerning this invoice, contact Name, Phone Number, Email

THANK YOU FOR YOUR BUSINESS!

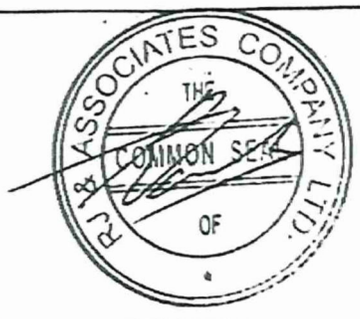

PACIFIC GAMES
SOLOMON ISLANDS

P.O. BOX 2443 Sea King Restaurant Building, Honiara, Solomon Islands

PAYMENT CERTIFICATE NO. PC- 01

Payment Schedule Name:	Moblisation Payment		
Project Name:	Construction of picket fencing at NSC Land, Burnscreek - Lot 1		
Contractor:	RJ & Associates Company Ltd		
Project Manager	Graham Lilo	**Certificate:**	PC - 02
Contract Administrator/Manager:	Soleana Gagahe	**Date Invoice Received:**	25-Jun-24
		Date Issued for payment:	01-Jul-24
		Contract No:	NA

A PROGRESS CLAIM SUMMARY

REF	PROGRESS CLAIMS	CONTRACT DETAILS	PAYMENT DETAILS	NOTES
	Contract Value	$ 3,212,632.13		
1	Payment 1 - Mobilization (50%) Payement shall be made prior to contractor's mobilization to site and commencement of works	$ 1,606,316.07	$ 1,606,316.07	Paid
2	Payment 2 - Progress Payment of 45% shall be made upon completion of all works as required in the scope of works	$ 1,445,684.46	$ 1,445,684.46	Paid
3	Payment 3 -Variation Payment -1	$ 734,521.97	$ 734,521.97	This Claim
7	**Progress Claim to date**	**$ 3,052,000.52**		
8	**Original Contract Value**	**$ 3,212,632.13**		
9	**Total Adjusted Contract Value**	**$ 3,947,154.10**		
10	**Balance of Contract Payment**	**$ 160,631.61**		

B PAYMENT DETAILS

	Progress payment for this claim	$ 734,521.97	
	Retention-Purchaser retains % of this payment pursuant to clause	$ -	
	Amount payable for this claim after Retention	$ 734,521.97	

Payment is certified as conform to payments terms and conditions as stated in Section IV: Payment Schedule of the Contract (Contract No: GTB 11/21)

Payment is hereby certified: 01/07/24
Graham Lilo (Project Manager) *Date*

Compliance and approved by: 4/07/24
Soleana Gagahe (Contract Manager) *Date*

Claim is hereby approved for payment by: 4/07/24
Leeroy Bird (Executive Director - PMU) *Date*

On presentation of this original to the Employer, the Contractor is entitled to payment within the period stated in the Contract Agreement: Article 10.

MEMORUNDUM

Ref/06/24 **Ref No issued 06-24**

To: Dr Jimmie Rodgers
NHA Chair/Secretary to the Prime Minister
NHA/OPMC

Thru: Christian Nieng
Executive Director/Secretariat
Chairman-ITB
National Hosting Authority

Date: 19th June 2024

Dear Chair, NHA/SPM,

SUBJECT: REQUEST APPROVAL TO AWARD VARIATION TO RJ & ASSOCIATES COMPANY LTD FOR CONSTRUCTION OF PICKET FENCING AT CHENGS LAND-BURNSCREEK.

I refer to the above, approval is required to award Contract for the works mentioned above.

The National Hosting Authority through project Management unit requires Construction of Picket fencing at Chengs Land.

The works is critical for the security of the land which has been purchased from Chengs Construction Limited as part of the Legacy Haus purchase. The area is currently unfenced and poses the risk of illegal settlers to move in. To be consistent with the neighboring NHA land recently fenced, it is recommended that the same picket fence be constructed for this site as well.

The compliance team after review of the submitted documents agreed that the request made by is in compliant with the variation process stipulated in the PCAM 2013 Chapter 2 (2.7) as well as approval by the NHA board with waiver of threshold instruction granted by MoFT as follows.

1. *Pursuant to the Decision of the NHA Board taken at its meeting on 23rd March 2023, authorizing the expenditure level that can be approved by the NHA Chair of up to $8 million dollars per procurement/tender.*

2. *The new threshold issued by the Minister of Finance in accordance with the Cabinet endorsed paper 2023.*

Lot No	Bidders name	Description of Lot	Recommended Bid amount
Lot 1	**RJ & Associates Company Ltd**	Construction of additional Picket Fence at Chengs land at Burnscreek	$1,469,043.94

Attached is the Technical Evaluation Report submitted by PMU Technical Evaluation Committee

Your Approval is hereby sought to expedite commencement of this very important project.

Sincerely

Leeroy Bird
Executive Director- PMU
National Hosting Authority

Procurement & Compliance Unit
National Hosting Authority

REQUEST FOR VARIATION APPROVAL

VARIATION (VO-1) FOR CONSTRUCTION OF PICKET FENCE AT CHENGS LAND-BURNSCREEK

CONTRACTOR NAME: RJ & ASSOCIATES

Request Letter for (ED/CEO/Chair/Tender Board Approval

NHA Ref: **NHA-PMU-190624**

Date: 20/06/24

To: **Dr. Jimmie Rodgers**
NHA Chair/GTB Co-Chair
National Hosting Authority

Date: 20/06/24

Dear ED,

SUBJECT: REQUEST APPROVAL FOR VARIATION FOR CONSTRUCTION OF PICKET FENCING AT BURNS CREEK TO ALLOW CONSTRUCTION OF PICKET FENCE FOR LAND NHA PURCHASED FROM CHENGS CONSTRUCTION LIMITED AT BURNS CREEK

I hereby refer to the above subject made in Pursuant to the need to construct a picket fence for the land NHA purchased from Chengs Construction Ltd that was part of the Legacy Haus purchase as well.

Furthermore, as per **SIG/PCAM 2013-*SECTION 6: CONTRACT ADMINISTRATION*** and ***sub-clause 6.1-Contract Variations, paragraph 1*** which states "*Variations may only be approved if quantities or the scope of works are increased at the Purchaser's request*" and whereby if deemed necessary to issue a contract variation.

In this case, we need to construct a picket fence around the land to stop illegal settlers from moving into the area. NHA has spent millions of dollars on the purchase of the Legacy Haus of which this vacant land was also part of. Therefore, it is only fitting that the area be fenced to discourage illegal settlers as well as to be consistent with the recently completed fence at the NHA land at Burns Creek. In doing so, the public will know that both lands are NHA owned.

The variation claim amounts to a total cost of **$1,469,043.94**, which is more than 10% of the contract value, thus your perusal and approval are needed to expedite this order.

Attached is the variation order for your review as well as the scope of works and priced Bill of Quantities for these additional works.

Thank you for your understanding.

Sincerely,

Graham Lilo
Project Manager- PMU

CC: FC – NHA
ED- NHA
ED - PMU
CM- PMU
NHA Legal Team

VARIATION ORDER FORM

The issuance of this Variation Order Form shall form part of the Contract, Contractor and/or Supplier shall not proceed with Works or Supply of Goods unless approval is granted by the Authorizing Officer for the value of variations within or below 10% of the total contract value, or responsible tender boards as reference to PCAM 2013.

CONTRACT SUMMARY INFORMATION:

CONTRACT NO:	GTB-GFC 01/24-LOT 1	**Variation Order No:**	No.1
CONTRACT NAME:	CONSTRUCTION OF PICKET FENCING AT NSC LAND AT BURNSCREEK, LOT 1		
SITES	BURNS CREEK		
CONTRACTOR NAME	RJ & ASSOCIATES COMPANY LIMITED		

DESCRIPTION OF ISSUING OF VARIATION ORDER (indicate below variation)

Requested by the Purchaser on: 15/04/23

TECHNICAL REASON (S) FOR VARIATION:

1.	**Reason for Variation:**	Additional Works/Goods	✓	Design Change	
		Specification Change		Provisional Item	
		Prime Cost Item		Omitted Work	
2.	How will this variation affect the contract period?		Increase original cost of Contract only		

The above will necessitate the following:

ITEM	DESCRIPTION	UNIT	QTY	RATE	AMOUNT
1	Construction of additional picket fence for land purchased from Chengs Construction Ltd at Burns Creek	no.	1		$1,469,043.94
				TOTAL VARIATION COST (this Variation)	

The value of the variations is calculated according to the Contractor and Supplier's bid rates

ADDITIONAL EXPENDITURE:

Original Contract Value	$3,212,632.13	
Estimated Variation Cost	$1,469,043.94	
CPA (Contract Price Adjustment)	$4,681,676.07	
Total Project Sum + Variation	$7,068,501.93	

The above rates are valid at base date for the purposes of contract price adjustment.			
Summary of Variation Order and Claims is attached.			
For Approval of this Variation Order Form, parties' representatives signed hereby:			
Variation recommendation by: *(to be requested by Technical Specialist and signed by Contractor/Supplier)*			
Name: Graham Lilo	Signed: ..... Date: 19/06/2024	Name: Junior Restaurant **SUPPLIER**	Signed: ..... Date: 20/06/24
Endorsement by: (this endorsement shall be submitted for final approval by Authorizing Officer or relevant Tender Boards)			
Name: Leeroy Bird **PROCUREMENT & COMPLIANCE MANAGER**	Signed..... Date: 19/06/2024	Name: Debbie Sifoni Rence **FINANCIAL CONTROLLER**	Signed ..... Date: 21/06/24
Name: Christian Nieng **Executive Director** **Secretariat** **National Hosting Authority**	Signed: ..... Date: 21/06/2024		
Approval By: (approval by relevant Authority according to the revised approval threshold granted by the NHA Board)			
Name: Dr. Jimmie Rodgers **Secretary to Prime Minister** **NHA Chair/GTB Co-Chair** **National Hosting Authority**	Signed ..... Date: 21/06/ 2024		

Suppliers and Contractors shall be notified to proceed with variation Works or Supplies after approval of order to vary Contract Scope of Works, quantities, and values.

SCOPE OF WORK

The work to be performed under this contract shall consist of furnishing all plans, equipment, materials, supplies, and manufactured articles, and for furnishing all transportation and services, including fuel, power, and essential communications, and forthe performance of all labor, work, or other operations required for the fulfillment of the Contract in strict accordance with the specifications as herein defined.

PROJECT SITE:



Depicted above is the site proposed for fencing

PRE-WORK PREPARATIONS

- While a building department permit is not required for this project, thecontractor should secure any necessary encroachment permits.
- The Contractor should secure an area on the properties to park trailers,vehicles, or any other equipment, and to place portable toilets.
- Contractor shall ensure there is electricity available on site.

SITE PREPARATIONS

- The contractor shall make sure that any shrubs or other obstructions arecleared from the fence path.
- The contractor will demolish and dispose of all existing fences:
- All pressure treated lumber must be disposed of properly.
- All old fence posts must be removed completely.
- All boards, nails, and debris must be cleaned up.
- The Contractor shall ensure that any ground that is getting dug into is clear of any utilities, wires, or pipes.

EXCAVATION

The contractor shall ensure that excavation for pad and strip footings conform to the details as in the drawings wher the depth of pad footing is 400mm x 300mm with strip footing for block work is 300mm depth and 300mm width for fence foundation.

REINFORCEMENT

The Contractor shall ensure that all reinforcement for footings is D12 or 12mm rough steel reinforcements as in the drawings with stirrups as required.

CONCRETE FOOTING

Concrete shall be of 25Mpa with required quantities as in the bills of quantities.

BLOCK WORK

Contractor must build two layers of blocks of 16-inch size prior to bottom fence framing for fence panels.

FENCE POSTS

Contractor must use 75mm square posts of 2200mm spacing with top welded "Y" allow for installation of Razor Barbed wire. Any portions of the fence that are on sidewalks or retaining wall shall be mounted with surface mounting brackets with appropriate concrete anchors.

FENCE INSTALLATION AND SPECIFICATIONS

The fence shall be of 25mm square tube welded across 2000 meters as specified in the drawings.

GATES

Contractor must use 100mm square posts at the bridge linking the area and install double gate with industrial hinges and locks.

CLEAN UP

The Contractor will be responsible for all cleanup of the job site to a"broom clean" status.

If there are any areas of concrete that are stained with dirt, paint, or any other substance from construction, the Contractor will be responsible forcleaning stains to where it is free of any visible sign.

The Contractor will be responsible for reinstalling any items that wereremoved from building for the purposes of construction unless other arrangements have been made and agreed upon with NHA.

The Contactor will remove and dispose of all trash and excess unusablematerials.

The Contractor will remove all tools, equipment, drop cloths/tarps, trash(produced by Contractor), and any other items that were put there by theContractor.

MATERIALS AND EQUIPMENT

The Contractor shall supply all necessary materials, fasteners, hardware,concrete, wood, and any other items necessary to complete the project.

The Contractor shall use his/her own equipment and shall provide allnecessary tools and materials to complete the job as described.

PROJECT MANAGEMENT UNIT

BILLS OF QUANTITIES FENCING AT NSC LAND AT BURNSCREEK

No.	DESCRIPTION OF WORK	QTY	UNIT	RATE (SBD)	AMOUNT (SBD)
A1	**Proposed Works**				
A1.1	*The following Bill of Quantities is particularly for proposed construction of proposed storm wtaer drainage at the games facilities*	*Note*			
A1.2	*The proposed works include all siteworks, Demolition works & new works as per the construction drawings & Specifications*	*Note*			
A2	**Bill of Quantities**				
A2.1	*Unless otherwise stated here in this Bill of Quantities, General measurement of work is in accordance with Australian Standard Method of Measurement of Building Works (ASMM) 5th Edition*	*Note*			
A2.2	*Where billing units are in contrary to ASMM5, such billing units have been converted for pricing conviniency by local contractors*	*Note*			
A3	**Contingencies**				
A3.1	*Refer to General Conditions of Contract for appropriate clauses regarding contingencies. Where given, the percentage Contingency shall be included and allowed for in the Summary of this Bill of Quantities*	*Note*			
A4	**Measurement**				
A4.1	*Unless otherwise stated herein, work shall be measured net as fixed in position*	*Note*			
A5	**Unit Rates**				

A5.1	*Unit Rates shall include cost of material, wastage, Cartage, Taxes, Duties and other allowances stated under general items of each section or sub section and preamble items to this Bill of Quantities.* ***Note that Labour costs, Transportation & Contractor Profits and overheads appear as separate components in the Summary of this Boq***	*Note*			
A5.2	*Also refer to appropriate Tender Conditions for any selected works or activities which are deemed to be included in the costs or unit rates*	*Note*			
A6	**Symbols and Abbreviation**				
	m = *metre*				
	m^2 = *square metre*				
	m^3 = *cubic metre*				
	Kg = *Kilogram*				
	t = *tonne*				
	No = *number*				
	Ls = *lump Sum*				
	Pc = *Provisional Cost*				
	Pair = *Pair of Items*				
	max = *maximum*				
	min = *minimum*				
	> = *greater than*				
	< = *less than*				
	RC = *Reinforced Concrete*				
	dia = diameter				
A7	**General Notes to Contractors**				
A7.1	*Unless otherwise stated in the Contract, This Bill of Quantities shall form part of the Tender or contract documents and shall be read along with the Tender Conditions, General Contract Conditions, Specifications and the Drawings*	*Note*			
A7.2	*Contractor shall further obtain general Notes and specifications from the Tender drawings & Specifiations*	*Note*			
A7.3	*Contractors are strongly advised to inspect the proposed project site and existing buildings under construction to ascertain the nature of work and all other details in connection with the proposed works and to allow for such in determining their Tender*	*Note*			
1.0	**Preliminaries & Site Establishments**				
1.1	Establishment for water and temporary electrical connection for works as required.	1	item	$10,000.00	$ 10,000.00

1.2	Erosion and sediment control during construction	1	item	$ 5,000.00	$ 5,000.00
1.3	Supervision, Project Management & Contractor On-Costs	1	item	$10,000.00	$ 10,000.00
1.4	Allow for construction works insurance such as public liabilities & workers compensation	1	item	$20,000.00	$ 20,000.00
1.5	Allow for site security during construction	1	item	$10,000.00	$ 10,000.00
2.0	**Earthworks/Excavation**				
2.1	Allow for clearing and disposal of shrubs and debris etc prior to earthworks.	500	m2	$ 10.00	$ 5,000.00
2.2	Allow for trench excavation including disposal of excavated earth. Also allow for the excavated earth to be levelled, compacted & neathly dressed in preparation for concrete pour	300.0	cu.m	$ 280.00	$ 84,000.00
3.0	**Concrete Works**				
3.1	Provision of concrete pad footing of 300mm x 300mm x 300m of 25mpa for 200 steel posts along fence	50	Cu.m	$ 1,800.00	$ 90,000.00
	Supply and install as block to the fence with mortar of 300x150x 150mm above ground level with two layer	2500	no	$ 17.50	$ 43,750.00
	Allow for concrete mortar fill as required to block works 20mpa	15	Cu.M	$ 1,200.00	$ 18,000.00
	Allow for smooth plaster @ 10mm thick for block works at required	500	m2	$ 25.00	$ 12,500.00
	Allow for top fence concrete cover of 150mm high along fence x 25mpa	15	cu.m	$ 1,500.00	$ 22,500.00
	Steel & Reinforcements				
3.2	Supply and install reinforcement for fence footings as in designs x 12mm	1000	m	$ 15.00	$ 15,000.00
	Supply and install for sturrups 6mm @200mm spacing for fence footing of 300mm x 300mm footing reinforcements	1000	m	$ 25.00	$ 25,000.00
	Allow for 75mm x 75mm steel posts x 2800mm with braced bottom and -Y-Shaped top	130	no	$ 550.00	$ 71,500.00
	Allow for 50mm x 50mm galvanized steel for top and bottom braces as required	220	m	$ 135.00	$ 29,700.00

	Allow for 25mm x 25mm length fabricated and welded to fence x 2400mm length @spacing of 100mm as required in the design	2200	no	$ 145.00	$ 319,000.00
	Supply and install double 25mm x 25mm as locks to install razor barbed wire @ top fence	900	m	$ 135.00	$ 121,500.00
	Miscelenouse Items & Painting				
	Allow for miscelenouse items for metal fabrications and welding	1	Item	$10,000.00	$ 10,000.00
	Allow for miscelenouse items for painting of fence with anti-Rust	1	Items	$20,000.00	$ 20,000.00
	SUBTOTAL				**$ 942,450.00**
	Labour (30%)				**$ 282,735.00**
	Profit & Margin (15%)				**$ 141,367.50**
	Sub-Total				**$1,366,552.50**
	WHT (7.5%)				**$ 102,491.44**
	TOTAL				**$1,469,043.94**

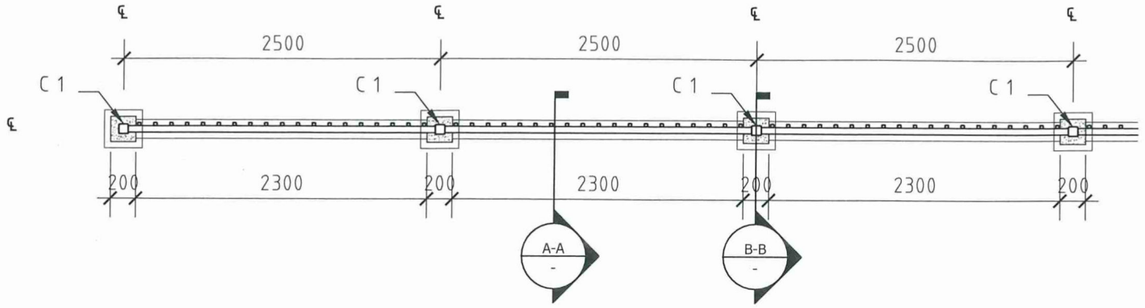

FENCE PLAN

- / XX-XX — 1: 50 @ A3

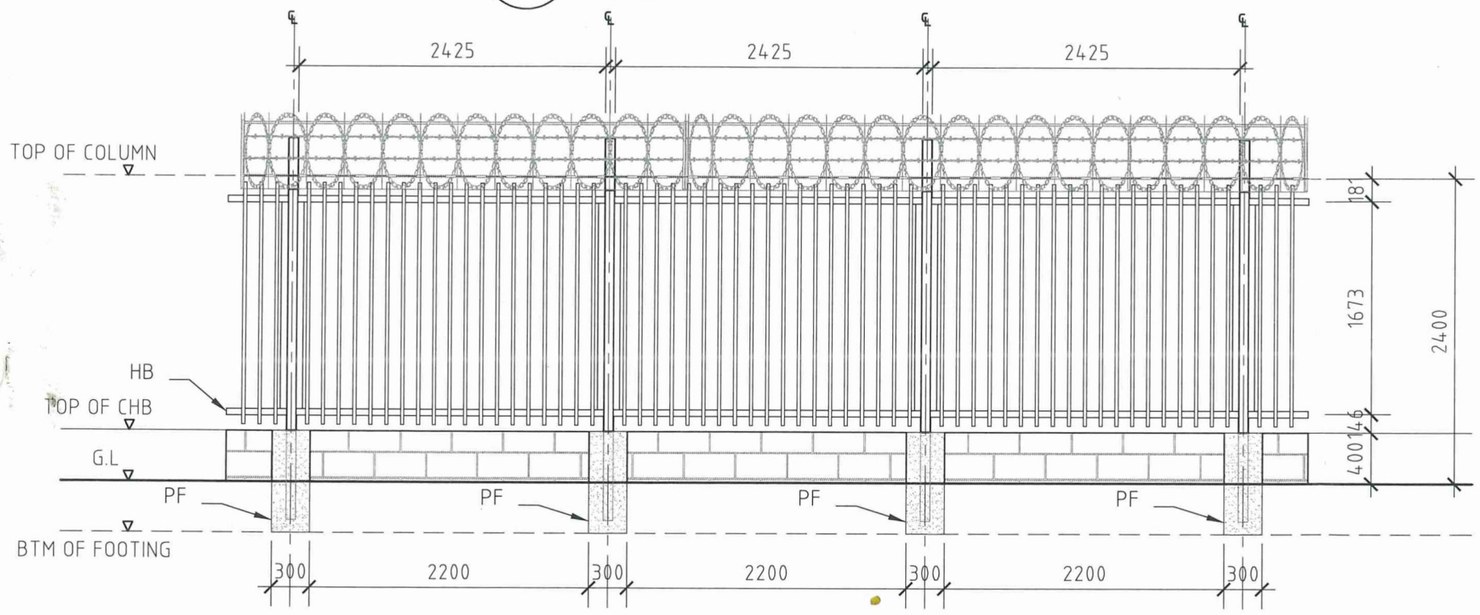

FENCE ELEVATION

- / XX-XX — 1: 50 @ A3

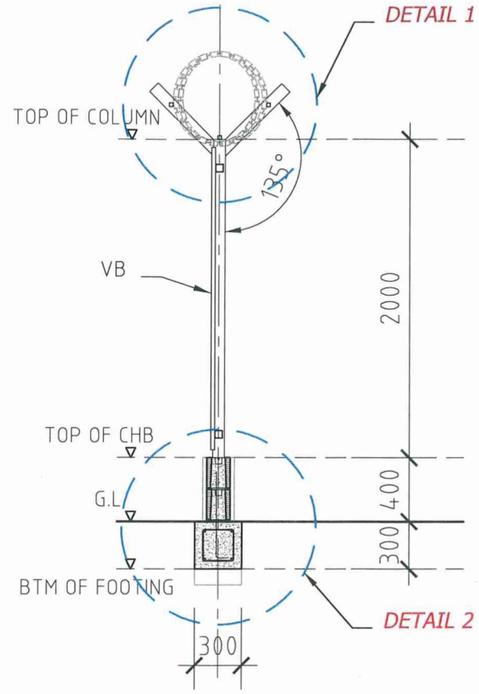

SECTION A-A

- / XX-XX — 1: 40 @ A3

25x25mm SQUARE HORIZ. GALV. TUBE TO SUPPORT RAZOR WIRE

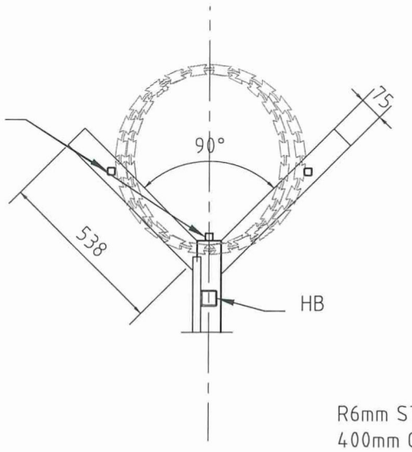

TYP. DETAIL 1

- / XX-XX — 1: 20 @ A3

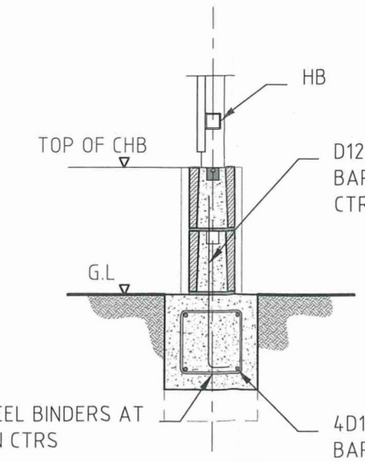

TYP. DETAIL 2

- / XX-XX — 1: 20 @ A3

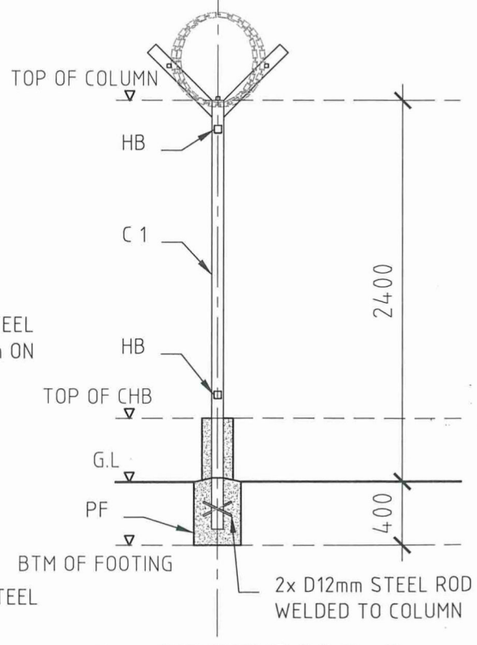

SECTION B-B

- / XX-XX — 1: 40 @ A3

KEY/LEGEND:
C1 - 75x75mm GALV. SQUARE STEEL COL. @2.5M ON CTRS.
HB - 50x50mm GALV. SQUARE HORI. BRACING
VB - 25x25mm GALV. SQUARE TUBE @100mm ON CTRS.
PF - 300x300mm CONC. PAD FOOTING @2.5M ON CTRS

2023 PACIFIC GAMES SOLOMON ISLANDS CHALLENGE • CELEBRATE • UNITE

National Hosting Authority
2023 Pacific Games

All Architectural, Structural, Civil, Hydraulics and Landscape drawings shall remains the sole property of the owner and are not to be duplicate or copied without written permission.

ISSUE	DESCRIPTION	DATE
A	CONCEPT DRAFT	--/--/--

NOTE:
TOTAL PERIMETER = 1,610.27 METER

PROJECT TITLE:
NSC BURNSCREEK,
TEMPORARY CARPARK SITE

DRAWING TITLE:
BOUNDARY PICKET FENCING

CLIENT:
National Hosting Authority

ISSUE STAMP:

DRAWN. D.P	CHECKED. P.H
APPROVED. --	SCALE. As Shown @A3
PROJECT No. --	PLOT DATE. 2/21/23
SHEET No. --	ISSUE No. A

NATIONAL HOSTING AUTHORITY

SOLOMON ISLANDS GOVERNMENT

C5

CONTRACT PAYMENT AND COMPLIANCE CHECKLIST

(For payment of contracts over $100,000)

This checklist is to be submitted along with contracts payments for works, goods and services

Required documents Prepared by Committee/Department	FI Ref	Committee	Procurement	Finance
Purchase Requisition (PR) for the entire value of the contract	**P7 35**			
Draft Contract **(not yet signed by Supplier)**	**P7 10.1**			
Tender Award by ITB/GTB	**P7 10.1**			
PR signed by requisition officer				
Vendor Information Form (for new vendor)				
ICT Checklist attached (if for ICT equipment)				
Progress Report of works/Photos etc				
Completion report if goods/services and works have been completed				
Other reports if any (goods and services)				
Payment certificate from Engineer matching amount in Requisition				
Invoice from Contractor matching amount in requisition				
Compliance checks required and done by Procurement				
Contract form approved and Signed by Chairman/EDs	**P7 27.2**			
PR has been signed by authorized person (and not approving payment to themselves)	**P7 44**			
Check amount on PR matches the signed contract				
Account code used is correct	**P7 38.5(e)**			
Name on PR matches signed contract	**P7 38.5(e)**			
Check price and rates are reasonable	**P7 43.2(b)**			
Data entry checks for PV and Cheque payments done by Finance Department				
Amount entered in AX matches Requisition				✓
Account code in AX matches Requisition				✓
Vendor name in AX matches Requisition				✓
Item code and Units entered (e.g. box, each) correctly				✓
Description has enough detail				✓
Check dates on future instalments entered correctly				✓
Budget OK				✓

Note: If any of the above is not able to be certified please include an explanation of why. This will speed up the compliance process.

Department Compliance performed by:

Signed: _____

Name and Position: _____

Date: _____

Procurement section Compliance performed by:

Signed: _____

Name and Position: _____

Date: _____

Finance Department Compliance performed by:

Signed: _____

Name and Position: N. Vular (F/O)

Date: 16/07/24

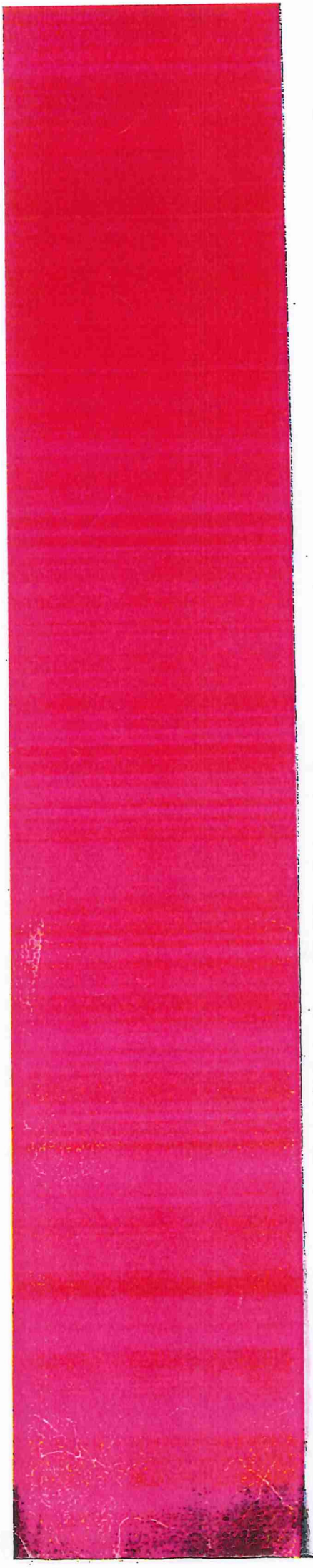

2023 PACIFIC GAMES OFFICE

Approval /Signature Required

Supplier Name: RJ - Rentention payment - NSE Land Picket fencing.

1) Minute	☐	Sign by ED	_____		
2) Requisition	☐	Compliance Officer	_____	Sign by ED	_____
3) Payment Voucher	☐	Sign by FC	_____	Sign by ED	_____
4) LPO	☐	Sign by FC	_____	Sign by ED	_____
5) IB Authorisations	☐	Sign by FC	_____	Sign by ED	_____

Comments:

Queries

* Defects Rectification Report
* CS.

Your Reference

*** Important Information displayed on ANZ Internet Banking screen is not shown on this printout**

Held for Authorisation
Transaction Number AJT30100

Transaction Details

ANZ to Other Bank Transfer

From Account: 5691140
Transfer Amount in Local Currency: SBD 148,584.24
Transfer From Amount: SBD 148,584.24
Indicative :
My Reference: Retention

Payment Details

You can view the status and details of your transactions and requests for the last 12 months via ANZ Internet Banking.

Done! Paid.

NATIONAL HOSTING AUTHORITY
P O Box 2443
Honiara, Solomon Islands
E:Accounts@sol2023.com.sb

RJ & Associates Company Ltd
Honiara

PAYMENT VOUCHER	
DATE	5/12/2024

Cheque Number IB TRANS

Total Amount Paid $148,584.24

Payment No.03 5% Retention for the construction of picket fencing at NSC Land Plot 1.

In Payment For the following invoices:

Supplier Inv	Purchase No.	Invoice Date	Invoice Amount	Previous Payments	Current Payment
1045	00002145	26/03/2024	$4,330,550.36	$4,181,966.12	$148,584.24

5/12/24.

5/12/24

Payment Voucher Prepared By: _____ Date: 05/12/2024

Signature of Claimant: _____

PRINT NAME: _____

NATIONAL HOSTING AUTHORITY

REQUISITION NUMBER: PMU - 1401 | 2024

DEPARTMENT: Finance & Admin.

PURCHASE REQUISITION

QUANTITY	UNIT	DESCRIPTION (Full and clear details of payment)	PURCHASING OFFICER USE ONLY		
			SUPPLIER	ORDER NO.	COST
1		Request 5% Retention payment for the Construction of picket fencing at NSC Land plot 1. (Completion payment.)	RJ & ASSOCIATES COMPANY LTD.		$160,631-61
				TOTALS	$160,631-61

Approval is requested to incur expenditure on the above

Estimated Cost (SBD): $160,631-61 Date: 26/11/2024

Requisition Officer (Name): Naenick Vulfor Sign:

Account Code: 6-2717

Account Name: Other Local Other Cost.

Funds available on this account:

Supervisors Certification (Accountable Officers):

Certifying Officer (Name): Leeroy. B Sign:

Post: ED PMU

Department: PMU

Authority is granted for expenditure not exceeding:

SBD$ 160,631.61

Signed:

Name:

Note: Authority for expenditure must be given by accounting officer or his/her deligated

Threshold Checklist

Payment requires one quote (10,000 below)	
Payment requires three quotes ($10,000.00 above)	
Is it a ITB Contract Payment	
Is it a GTB Contract Payment	
Payment is a Bid Waiver	

Compliance Check by: Signature

Name: Date: 26/11/24

Position:

Copy 1 White NHA Finance

Copy 2 Pink Compliance Department

NATIONAL HOSTING AUTHORITY

REQUISITION NUMBER: PMU - 1401 | 2024

DEPARTMENT: Finance & Admin.

PURCHASE REQUISITION

QUANTITY	UNIT	DESCRIPTION (Full and clear details of payment)	PURCHASING OFFICER USE ONLY		
			SUPPLIER	ORDER NO.	COST
1		Request 5% Retention payment for the Construction of picket fencing at NSC Land Plot 1. (Completion payment)	RJ & ASSOCIATES COMPANY LTD.		$160,631-61
				TOTALS	$160,631-61

Approval is requested to incur expenditure on the above

Estimated Cost (SBD): $160,631-61 Date: 26/11/2024

Requisition Officer (Name): Nuenick Vulfaw Sign:

Account Code: 6-2717

Account Name: Other Local Other Cost.

Funds available on this account:

Supervisors Certification (Accountable Officers):

Certifying Officer (Name): Leeroy. G Sign:

Post: ED PMU

Department: PMU

Authority is granted for expenditure not exceeding:

SBD$ 160,631.61

Signed:

Name: CAN

Note: Authority for expenditure must be given by accounting officer or his/her deligated

Threshold Checklist

Payment requires one quote (10,000 below)	
Payment requires three quotes ($10,000.00 above)	
Is it a ITB Contract Payment	
Is it a GTB Contract Payment	
Payment is a Bid Waiver	

Compliance Check by: Signature

Name: Date: 26/11/24

Position:

Copy 1 White NHA Finance
Copy 2 Pink Compliance Department
Copy 3 Yellow Requesting Department

C/-P.O. Box 2443
Honiara
Solomon Islands

Phone:
677 7308800

Facebook page:
Sol2023 XVII Pacific Games

NATIONAL HOSTING AUTHORITY
XVII 2023 PACIFIC GAMES

Ref: GL-11/12/24 Date: 12 November 2024

MEMO

To: Christian Nieng
Executive Director - NHA

..... Signature ..... Date

Thru: Leeroy Bird
ED -PMU

..... Signature 28/11/2024 Date

Dear ED,

Subject: REQUEST 5% RETENTION PAYMENT TO RJ & ASSOCIATES COMPANY LTD FOR THE CONSTRUCTION OF PICKET FENCING AT NSC LAND PLOT 1

I refer to the above, payment is requested to the aforementioned company for works done for NHA.
Particulars of payment are as follows:

No.	Description	Amount
1	Retention Payment – 5% claim for the release of retention payment after DLP	$160,631.61
	TOTAL	**$160,631.61**

Attached are relevant documents for this payment

Kind Regards,

Graham Lilo
Project Manager
National Hosting Authority

PAYMENT SCHEDULE

CONSTRUCTION FOR PICKET FENCING AT NSC/NHA LAND BURNSCREEK - LOT 1

RJ & ASSOCIATES COMPANY LTD

Payment No.	DATE		Award Amount	Retention 5%	With Holding Tax 7.5%	Amount Paid	Status
			3,212,632.13		7.50%		
No.1	27/03/2024	50%	1,606,316.07		120,473.70	1,485,842.36	Paid
No.2	11/06/2024	45%	1,445,684.46		108,426.33	1,337,258.12	Paid
No.3	26/11/2024	5%	160,631.61		12,047.37	148,584.24	Payment in Progress
Variation No.01	16/07/2024	50%	734,521.97		55,089.15	679,432.82	Paid
Variation No.02	20.08.2024	50%	734,521.97		55,089.15	679,432.82	Paid
TOTAL			***4,681,676.07***	-	***351,125.71***	***4,330,550.36***	

RJ &ASSOCIATES COMPANY LIMITED

INVOICE 1032

Date: 5/11/2024

BSP ACCOUNT # 2001204706

For: Rentention Claim 5% for construction of Picket Fencing at NSC/NHA Burnscreek, Lot 1

To: NHA
P O BOX 2443
Honiara

West Honiara
Phone: 677 7463888
Email - rejack36@gmail.com

DESCRIPTION	Column1	AMOUNT
Being for 5% retention claim for the construction of picket fencing at NSC/NHA Land Burnscreek Lot 1.		$160,631.61

SUBTOTAL	$160,631.61
SALES TAX	
TOTAL	$160,631.61

Make all cheques payable to RJ &ASSOCIATES COMPANY LIMITED. If you have any questions concerning this invoice, contact Name, Phone Number, Email

THANK YOU FOR YOUR BUSINESS!

RJ & ASSOCIATES COMPANY LTD. THE COMMON SEAL OF

PACIFIC GAMES
SOLOMON ISLANDS

P.O. BOX 2443 Sea King Restaurant Building, Honiara, Solomon Islands

PAYMENT CERTIFICATE NO. PC- 05

Payment Schedule Name:	Retention Payment		
Project Name:	Construction of picket fencing at NSC Land, Burnscreek - Lot 1		
Contractor:	RJ & Associates Company Ltd		
Project Manager	Graham Lilo	Certificate:	PC - 05
Contract Administrator/Manager:		Date Invoice Received:	11-05-24
		Date Issued for payment:	11-12-24
		Contract No:	NA

A PROGRESS CLAIM SUMMARY

REF	PROGRESS CLAIMS	CONTRACT DETAILS	PAYMENT DETAILS	NOTES
	Contract Value	$ 3,212,632.13		
1	Payment 1 - Mobilization (50%) Payement shall be made prior to contractor's mobilization to site and commencement of works	$ 1,606,316.07	$ 1,606,316.07	Paid
2	Payment 2 - Progress Payment of 45% shall be made upon completion of all works as required in the scope of works	$ 1,445,684.46	$ 1,445,684.46	Paid
3	Payment 3 -Variation Payment -1	$ 734,521.97	$ 734,521.97	Paid
4	Payment 4 -Variation Payment -2	$ 734,521.97	$ 734,521.97	Paid
	Payment 5 - Retention Payment	$ 160,631.61		This Claim
7	**Progress Claim to date**	**$ 3,052,000.52**		
8	**Original Contract Value**	**$ 3,212,632.13**		
9	**Total Adjusted Contract Value**	**$ 4,681,676.07**		
10	**Balance of Contract Payment**	**$ 160,631.61**		

B PAYMENT DETAILS

Progress payment for this claim	$ 160,631.61	
Retention-Purchaser retains % of this payment pursuant to clause	$ -	
Amount payable for this claim after Retention	-	

Payment is certified as conform to payments terms and conditions as stated in Section IV: Payment Schedule of the Contract (Contract No: GTB 11/21)

Payment is hereby certified: 12/11/24
Graham Lilo (Project Manager) *Date*

Claim is hereby approved for payment by: ...../...../.....
Leeroy Bird (Executive Director - PMU) *Date*

On presentation of this original to the Employer, the Contractor is entitled to payment within the period stated in the Contract Agreement: Article 10.

MEMORUNDUM

Ref/09/23 **Ref No issued 01-24**

To: Dr Jimmie Rodgers
NHA Chair/Secretary to the Prime Minister
NHA/OPMC

.....NHA 18/1/24

Thru: Christian Nieng
Executive Director/Secretariat
Chairman-ITB
National Hosting Authority

.....Date.....9/1/24

Leeroy Bird
ED/PMU/ Secretary ITB/GTB
National Hosting Authority

.....date:...8/01/24

Date: 9th January 2024

Dear Chair, NHA/SPM,

SUBJECT: REQUEST APPROVAL TO AWARD CONTRACT TO RJ & ASSOCIATES COMPANY LTD AND SMARTMARK CONSTRUCTION AND BUILDING DESIGN FOR CONSTRUCTION OF PICKET FENCING AT NSC/NHA LAND-BURNSCREEK.

I refer to the above, approval is required to award Contract for the works mentioned above.

The National Hosting Authority through project Management unit requires Construction of Picket fencing at NHA/NSC Land. The works is required as already approved by NHA chair the budget of SBD$5.8m for two lots.

The works is required as theft of solar lightings, public use of the area for crossings and other illegal activities are increasing. Also, people whom NHA had removed from the site will move in again if fence is not erected.

The compliance team after review of the submitted documents agreed that the request made by PMU is in compliant with the waiver process stipulated in the PCAM 2013 Chapter 2 (2.7) as

well as approval by the NHA board with waiver of threshold instruction granted by MoFT as follows.

1. *Pursuant to the Decision of the NHA Board taken at its meeting on 23rd March 2023, authorizing the expenditure level that can be approved by the NHA Chair of up to $8 million dollars per procurement/tender.*

2. *The new threshold issued by the Minister of Finance in accordance with the Cabinet endorsed paper 2023.*

The Solomon Sheet Limited is recommended through TEC by the PMU team, the project is an urgent one since dormitories will be handed over next week.

Lot No	Bidders name	Description of Lot	Recommended Bid amount
Lot 1	**RJ & Associates Company Ltd**	Construction of 2.5km Fence at NSC/NHA land at Burnscreek	$3,212,632.13
Lot 2	**Smart Construction & Building Design**	Construction of 2km Fence at NSC/NHA land at Burnscreek	$2,386,825.86

Attached is the Technical Evaluation Report submitted by PMU Technical Evaluation Committee

Your Approval is hereby sought to expedite commencement of this very important project.

Sincerely

Peter Himane
Procurement Compliance Manager
National Hosting Authority

NATIONAL HOSTING AUTHORITY
Solomon Islands Government

Bid / Quotation Waiver

In some instances, it is recognised it may not be possible to observe the requirements of competitive quotations or tendering as is stipulated in the FIs, and in which case a **Bid Waiver Form** must be completed. This is prepared by the Division / Section making the purchase, and must be approved by the authority that would approve a purchase of that value (e.g. GTB for Bid Waivers on purchases over $500,000). The waiver will only be granted in circumstances where observing the normal requirements would result in detriment to the people or assets of the Solomon Islands, or where no benefit would be obtained by observing the requirements.

Example where are waiver would be granted include but would be limited to the below.

- In a declared emergency (e.g. SI at War, Emergency, Natural Disaster)
- There is a genuine market limitation on the number of suppliers.
- Equipment is specialized or technical in nature.

Description of Product / Service

Picket Fencing Works for NSC Land

REASON FOR REQUEST (Please Tick)

Genuine Market Limitation	✓	**Natural Disaster**		**SI at War**	
Public Emergency	✓	**Technical or Specialized Equipment**		**Other**	✓

Please summarise the reason for the request (you may attach further support if necessary)

NHA had worked with reputable construction firms for the past years, thus, this waiver is required for restrictive tender. This means that rather than going on public tender, NHA will send directly to Contractors for the required works.

This also means that though waiver is required for restrictive tender, proper process of collective costings and quote is required as per PCAM & FI.

Requested by: Division / Section	**Signed:** **Date:** 8/01/24
Project Management Unit (GFC)	**Leeroy Bird**
	Post: Executive Director (PMU)

Approved by: Accounting Officer	**Signed:.....Date:**
	Christian Nieng **Executive Director** **National Hosting Authority**
Endorsed by Board Representative	**Signed:.....date:15/3/24**
	Dr Jimmie Rodgers **Chair NHA/SPM** **Chairman Games Tender Board**

NATIONAL HOSTING AUTHORITY

SOLOMON ISLANDS GOVERNMENT

C5

CONTRACT PAYMENT AND COMPLIANCE CHECKLIST

(For payment of contracts over $100,000)

This checklist is to be submitted along with contracts payments for works, goods and services

Required documents Prepared by Committee/Department	FI Ref	Committee	Procurement	Finance
Purchase Requisition (PR) for the entire value of the contract	**P7 35**	✓		
Draft Contract **(not yet signed by Supplier)**	**P7 10.1**	✓		
Tender Award by ITB/GTB	**P7 10.1**	✓		
PR signed by requisition officer		✓		
Vendor Information Form (for new vendor)		✓		
ICT Checklist attached (if for ICT equipment)		✓		
Progress Report of works/Photos etc		✓		
Completion report if goods/services and works have been completed		✓		
Other reports if any (goods and services)		✓		
Payment certificate from Engineer matching amount in Requisition		✓		
Invoice from Contractor matching amount in requisition		✓		
Compliance checks required and done by Procurement				
Contract form approved and Signed by Chairman/EDs	**P7 27.2**		✓	
PR has been signed by authorized person (and not approving payment to themselves)	**P7 44**		✓	
Check amount on PR matches the signed contract			✓	
Account code used is correct	**P7 38.5(e)**		✓	
Name on PR matches signed contract	**P7 38.5(e)**		✓	
Check price and rates are reasonable	**P7 43.2(b)**		✓	
Data entry checks for PV and Cheque payments done by Finance Department				
Amount entered in AX matches Requisition				✓
Account code in AX matches Requisition				✓
Vendor name in AX matches Requisition				✓
Item code and Units entered (e.g. box, each) correctly				✓
Description has enough detail				✓
Check dates on future instalments entered correctly				✓
Budget OK				✓

Note: If any of the above is not able to be certified please include an explanation of why. This will speed up the compliance process.

Department Compliance performed by:

Signed: _____

Name and Position: _____

Date: _____

Procurement section Compliance performed by:

Signed: _____

Name and Position: P Hzmane

Date: 28/11/24

Finance Department Compliance performed by:

Signed: _____

Name and Position: N. Vulana (F/O)

Date: 05/12/24



CONTRACT AGREEMENT

FOR

CONSTRUCTION OF PICKET FENCING AT NSC LAND AT BURNSCREEK

LOT 1

BETWEEN

NATIONAL HOSTING AUTHORITY

(Solomon Islands Government)

AND

RJ & ASSOCIATES COMPANY LIMITED

March 2024

Table of Contents

SECTION I: CONTRACT AGREEMENT 2
SECTION II: GENERAL CONDITIONS OF CONTRACT 5
SECTION III: SPECIAL CONDITIONS OF CONTRACT 13
SECTION IV: PAYMENT SCHEDULE 17
SECTION V: SCOPE OF WORKS/ SPECIFICATIONS 18
SECTION VII: ANNEXES TO THE CONTRACT 29

SECTION I: CONTRACT AGREEMENT

This Contract Agreement is made between the two parties mentioned as the Client and Contractor herein described as below.

The Client

The Client herein named as the Government of the Solomon Islands, which has its seat in Honiara, represented by the **National Hosting Authority**, legally represented in this matter by **Mr Christian Nieng**, the **Executive Director - NHA**, hereinafter referred to as the Client,

And

The Contractor:

The Contractor herein named as **RJ & Associates Company Limited** which has its registered office in Honiara, legally represented in this matter by Mr **Jack Resture Jnr,** hereinafter referred to as the Contractor, and have agreed to conduct **Construction of Picket Fencing** at the **NSC Land, Burnscreek, East Honiara** herein mentioned as Works specified in the Scope of Works.

1. The price for the execution of Works is confirmed in the Schedule of Estimated Quantities as part of your submission dated **15th March 2024.**
2. The total accepted Bid Price shall be **SBD$ Three Million, Two Hundred and Twelve Thousand, Six Hundred and Thirty-Two Dollars and Thirteen Cents only (SBD $3,212,632.13).** The agreed price for the execution of the Works is fixed for the duration of the Contract.
3. The place where the Works have to be executed shall be at the **NSC Land, Burnscreek, East Honiara** at the specific site as selected by the Client.
4. The time limits for execution of the Works shall be maximum of **90 days** and shall be on the basis turnkey specific contract process.
5. The Contractor shall strictly comply with the terms and conditions as mentioned in the Special & General Contract Conditions for the Execution of Works and the Technical Specifications/Bill of Quantities/Drawings. Any general and special terms and conditions drawn up by the Contractor do not apply.
6. The Contractor, herein **RJ & Associates Company Limited** shall make invoice(s) to the Client at the Address mentioned as Project Management Unit of National Hosting authority, quoting the, the amount of progress payment as per Schedule and above-mentioned Contract number and name.
7. This Contract is subject to the provisions of the attached General Conditions of Contracts for the Execution of Works.
8. This Contract is made up of the following documents, in order of precedence:

- *this Contract Agreement*
- *the Special Conditions of Contract;*
- *the General Conditions of Contract;*

- *Payment Schedule*
- *Scope of Works/ Specifications*
- *Specifications & General Requirements*
- *Site Setout & Drawings*
- *Annexes to the Contract*
    - Tender Award Letter
    - Performance Securing Declaration
    - Contractor's Priced Bill of Quantities
    - Contractor's Insurance Certificate
    - Contractor's HCC License
    - Contractor's Company Haus License
    - Contractor's Inland Revenue Division Tax Certificate
    - Contractor's Work Schedule

The various documents making up this Contract shall be deemed to be mutually explanatory; in cases of a different interpretation, the documents shall prevail in the order in which they appear above.

SIGNING OF CONTRACT AGREEMENT

This Contract enters into force on the date on which it is signed by both Parties [and ends as soon as the Execution of the Works has been completed].

IN WITNESS whereof the parties hereto have caused this Agreement to be executed in accordance with the laws of Solomon Islands on the day, month and year specified above.

Parties to this Contract hereby agreed and signed as follows:

For the Client - National Hosting Authority		**For the Contractor**	
Name:	Christian Ning	**Name:**	Jack Resture Jnr
Signature:		**Signature:**	
Designation:	Executive Director National Hosting Authority	**Designation:**	Managing Director RJ & Associates Company Limited
Date:	25/03/2024	**Date:**	25/03/2024

NATIONAL HOSTING AUTHORITY EXECUTIVE DIRECTOR SOL 2023 PACIFIC GAMES

RJ & ASSOCIATES COMPANY LTD. THE COMMON SEAL OF

Witness signing by Project Management Unit/NHA

Signature	
Name:	Leeroy Bird
Designation:	Executive Director Project Management Unit-NHA
Date:	25/03/2024

NATIONAL HOSTING AUTHORITY EXECUTIVE DIRECTOR PMU SOL 2023 PACIFIC GAMES

SECTION II: GENERAL CONDITIONS OF CONTRACT

The terms in these General Conditions of Contract for the Execution of Works for the Government of the Solomon Islands are defined as follows:

1.1 **SPECIFICATIONS AND PERFORMANCE REQUIREMENTS:** a document attached to the Contract which, when initialled by both parties, forms part of the Contract.

1.2 **DOCUMENTATION:** the manuals or other user instructions accompanying the installations and equipment included as part of the Works, in English or another language agreed between the Parties.

1.3 **EXECUTION OF WORKS:** these General Conditions of Contract for the Execution of Works, which apply to and form part of the Contract.

1.4 **INSPECTION:** the inspection of the Works for visible defects and non-conformity carried out at the Client's request on the Contractor's site prior to Delivery.

1.5 **CLIENT:** The Government of the Solomon Island or any other Government agency using these General Conditions of Contract for the Execution of Works.

1.6 **CONTRACTOR:** The Client's counterparty.

1.7 **DELIVERY:** the delivery of the Works referred to in Article 3.1, including its assembly or installation in accordance with the requirements set out in the Contract.

1.8 **CONTRACT:** the written agreement between the Client and the Contractor to which these Purchasing Conditions are declared to be applicable.

1.9 **PARTY:** The Client or the Contractor, depending on the context.

1.9 **WORKS:** the description of the activities to be implemented by the Contractor, including equipment to be delivered and installed by the Contractor under the Contract.

1.10 **EQUIPMENT:** the equipment which the Contractor has included in his Works as part of this Contract.

1.11 The **Project Manager** is the person named in the Special Conditions of the Contract (SCC) (or any other competent person appointed by the Client and notified to the Contractor, to act in replacement of the Project Manager) who is responsible for supervising the execution of the Works.

1.12 The **Contract Administrator** is the Person named in the Special Conditions of the Contract (SCC) or any other person present at the office administering the Contract.

Article 2 Application

2.1 Amendments or additions to the Contract or changes from certain Contract Conditions are binding only if they have been explicitly agreed in writing between the Parties.

2.2 In the event of inconsistency between this text of these Contract Conditions and translations of them, this text always prevails.

PERFORMANCE OF THE CONTRACT

Article 3 Delivery

3.1 Unless agreed otherwise in writing, Delivery of the Works, specified by the Client in the Technical Specifications and Scope of Works, and quoted for by the Contractor will take place on the agreed delivery date(s) or within the agreed delivery period(s) at the

delivery location specified by the Client, and the Contractor will bear all costs and risks connected with the delivery of the Works, including, where applicable, the import duties and responsibility for complying with the associated formalities.

3.2 The agreed delivery date(s) or period(s) are fixed and final. If the Works are not delivered at the agreed location within the agreed period, the Contractor will be in default without notice of default being required.

3.3 Delivery of the Works earlier than the agreed delivery date(s) or period(s) will take place only after prior written consent has been obtained from the Client and will not alter the agreed payment date.

3.4 The Client has the right to defer Delivery unless this would place a disproportionate burden on the Contractor. The Contractor is obliged to maintain the Works for the Client at no additional cost until the deferred Delivery date, unless this would place a disproportionate burden on the Contractor, in which case the Parties will hold discussions to find a reasonable arrangement acceptable to both Parties. The provisions of Articles 3.2, 3.4 and 14 apply to the Delivery deferred by the Client, except that the Contractor will be in default, without prior notice of default, only after the deferred delivery date(s) or period(s) have been exceeded.

Article 4 Guarantee

4.1 The Contractor guarantees that the delivered Works complies with the Specifications and Performance Requirements the Contractor has been bidding against and which have been accepted by the Client by issuing this Contract, is free of defects and is suitable for the purpose for which the Works are intended. The Works does not comply with the Contract if the Works does not have the characteristics the Client might expect based on the Contract.

4.2 If the Client has not provided a more detailed description of the requirements to be delivered by the Contractor, the Works should in any event be of good quality and meet at least the Construction and Building standards as applicable in the Solomon Islands, customary requirements concerning soundness, fitness for purpose and workmanship, and all requirements and customary industry regulations concerning quality, safety, health and the environment.

4.3 The Client may no longer refer to the fact that the Works does not comply with the Contract if it has not notified the Contractor accordingly in writing within 60 days of discovering this fact. If the Contractor receives such a notification from the Client, the Contractor will rectify the defect or non-conformity within a period set by the Client in accordance with the provisions of Article 13.

4.4 The Contractor guarantees that the delivered Works is free of any special encumbrance or restriction that the Client has not accepted explicitly and in writing. The Contractor indemnifies the Client against all claims in this regard.

4.5 The Client may demand that, as security for compliance with, inter alia, the Contractor's Defects Liability Period obligations under this Contract, a guarantee may be required in a form of a Bankers Guarantee through a bank accepted by the Client.

4.6 The Client may demand that, as security for the completion of the Contract, and the Contractor's performance obligations under this Contract, a Performance Guarantee in the form of a Bankers Guarantee through a bank accepted by the Client.

4.7 The Contractor guarantees the delivery of spare-parts for the equipment delivered under the performance of his contract for the duration of the technical or economical lifespan of the equipment quoted. Special requirements regarding the provision and availability of spare-parts may be requested at time of tendering.

Article 5 Inspection

5.1 At the Client's request, the Works may be regularly inspected by the Client, or a third party designated by the Client during the execution of the Contract. However, the Client is not obliged to carry out such an Inspection.

5.2 If the Client wishes to inspect the Works:

a. the Contractor will allow the Client, or a third party appointed by the Client full access to the location where the Contractor is executing the Contract.
b. the Contractor will, upon request and at no cost to the Client, cooperate with the Inspection and facilitate the Client or a third party appointed by the Client at the location and reasonable assistance in terms of staff and materials.
c. the Inspection, if the Contractor so desires, will take place in its presence or in the presence of an expert designated by the Contractor. The associated costs will be borne by the Contractor.

5.3 If the Client rejects the Works to be delivered, the Contractor is obliged, without prejudice to all other rights or claims of the Client, to rectify without delay, at its own expense and risk, the defects and notify the Client when the Works are ready for a new Inspection. The provisions of Article 5 apply in full. Rejection by the Client during the first or previous Inspection will not lead to the agreed delivery period being extended.

5.4 The approval of the Works by or on behalf of the Client does not include any approval that the Works complies with the guarantees given in accordance with Article 4.

RELATIONS BETWEEN THE PARTIES

Article 6 Contacts

6.1 Each Party will appoint a contact person to maintain contacts in relation to the performance of the Contract. The Parties will notify each other in writing of the person they have appointed as their contact.

6.2 The contacts may represent and bind their Parties, unless the Contract provides otherwise.

Article 7 Method of Notification

7.1 All notifications given by the Parties on the basis of the Contract must be in writing.

7.2 Oral communications, undertakings or agreements have no legal force unless confirmed in writing.

7.3 'In writing' is understood to include 'electronically', provided:

a. the notification can be consulted by the addressee.
b. the authenticity of the notification is sufficiently guaranteed; and
c. the identity of the sender can be determined with sufficient certainty.

Article 8 Confidentiality

8.1 The Contractor will not disclose in any way any information that is provided by the Client or that is made known to it or comes to its knowledge, which it knows or may

reasonably suspect to be confidential, except in so far as it is compelled to disclose such information under a court ruling.

8.2 The Contractor will pass-on the duty of confidentiality referred to in this article on all staff or sub-Contractors it engages in the performance of the Contract and will ensure that this duty is observed.

8.3 The Contractor will not issue press releases or make other public statements about the Contract except with the prior consent of the Client.

8.4 If the Contractor breaches its duty of confidentiality, the Client may impose a penalty, as laid down in the Special Conditions of Contract. Payment of the penalty, which is payable forthwith, does not discharge the Contractor from its liability for indemnifying any loss caused by the breach.

FINANCIAL PROVISIONS

Article 9 Prices

9.1 Unless agreed otherwise in writing, the price(s) agreed for the Works include the costs of transport, taxes, and import duties, other levies, insurance, packaging costs, incidental services, disposal costs and any assembly or installation costs.

9.2 The prices for the Works are fixed, unless the Contract specifies the circumstances that may lead to a price adjustment and the way such an adjustment should be made.

Article 10 Invoicing and payment

10.1 The Contractor will invoice the Client for the delivered Works at the agreed milestones and at the agreed prices in accordance with the Price Schedule. The Contractor will send the invoice to the address specified by the Client, stating the date and number of the Contract and other details requested by the Client.

10.2 The Contractor will send the invoice in hard copy so that it can be received and processed in accordance with the specifications issued by the Client.

10.3 The right to payment arises upon Delivery of agreed milestones or after Delivery of the Works, unless the Contract provides otherwise. The Client will pay the price for the delivered Works within 30 days of receiving the invoice if it satisfies the provisions of the Contract. The Client has the right to offset invoice amounts owed against amounts that the Contractor owes the Client.

10.4 The Client may withdraw retention payment from the Contractors milestone payments. The total sum of the accumulated retention payment shall be released after satisfactory performance after the Defects Liability Period and upon verification by the Client.

10.5 Payment of an invoice by the Client does not recognize that the Works is in conformity with the guarantees given in accordance with Article 4.

10.6 In case payment is subject to SIG tax law, all taxes applicable will be deducted from the invoice before payment.

Article 11 Advance

11.1 If it has been agreed that, for the purpose of performing the Contract, the Client should make an Advance Payment prior to the start of the Works, the Contractor will issue the Client with an Advance Payment bank guarantee in advance of making the payment to the Contractor. This Advance Payment bank guarantee issued by the Contractor will

cover the value of the Advance Payment. The Client is not required to pay any of the cost of the guarantee.

11.2 The '*Advance Payment Guarantee*" will be issued by a bank approved by the Client, in accordance with the model attached to the Standard Bidding Documents.

11.3 The Client may allow the Contractor to claim Milestone payments and allow an offset of the Advance Payment to the milestone payments.

NON-PERFORMANCE AND DISSOLUTION

12. Penalty

12.1 If the Works have not been delivered within the time limit agreed, the Contractor will owe the Client an immediately payable penalty of 0.1% of the price of the Contract for every day the failure persists, subject to a maximum of 10% of that price. If Delivery has become permanently impossible for reasons other than force majeure, the Contractor will immediately be liable for the full penalty of 10% of the price of the Works in question.

12.2 The penalty is payable to the Client without prejudice to all its other rights or claims, including:

a. its right to demand that the Contractor fulfil its agreed obligation to deliver the Works (in so far as this has not become permanently impossible);

b. its right to compensation.

12.3 The penalty will be set off against the amounts owed by the Client, irrespective of whether the rights to such amounts have been assigned to a third party.

Article 13 Non-performance

13.1 If the delivered Works or the equipment incorporated into the Works does not comply with the guarantees referred to in Article 4, the Client may demand that the Contractor repair or correct the Works. The associated costs will be borne by the Contractor.

13.2 If, after receiving a written demand from the Client, the Contractor fails to comply, within the period stipulated therein, with a requirement as referred to in paragraph (13.1), the Client has the right, without prior recourse to the Courts, to choose between:

a. replacement of the Contractor or replacement/repair of the Equipment incorporated into the Works by a third party at the Contractor's expense;

b. replacement of the Contractor or return of the Equipment incorporated into the Works at the Contractor's expense and risk and dissolution of the Contract in accordance with the provisions of Article 16 and, in consequence, crediting of however much of the purchase price has already been paid for the Works in question.

13.3 The provisions of paragraphs (13.1) and (13.2) do not affect other rights and claims that the Client may derive from non-performance.

Article 14 Liability

14.1 A Party who fails to meet its obligations is liable to the other Party for any loss incurred by the other Party.

14.2 The Contractor indemnifies the Client against any third-party claims for damages resulting from a failure as referred to in paragraph 1.

Article 15 Force Majeure

15.1 In the event of temporary force majeure, the Contractor will immediately notify the Client in writing after the circumstances bringing about force majeure have occurred, stating the cause of the force majeure. The Client then has the right to choose between:

a. Allowing the Contractor to defer compliance with its obligations under the Contract for a reasonable period of up to four weeks. If the Contractor is still unable to fulfil its obligations under the Contract when this time limit expires, the Client has the right to dissolve the Contract with immediate effect, without being obliged to pay compensation or any costs to the Contractor.

or

b. Dissolution of the Contract with immediate effect, without being obliged to pay compensation or any costs to the Contractor.

15.2 In the event of long-term force majeure on the part of the Contractor, the Contractor will immediately notify the Client and the Client has the right to dissolve the Contract with immediate effect out of court, without being obliged to pay compensation or any costs to the Contractor.

15.3 The term 'force majeure' is in any event understood not to include: staff shortages, strikes, staff illness, shortages of raw materials, transport problems, breach of obligations by Contractors, failures in the Contractor's production process and liquidity or solvency problems on the part of the Contractor, or failures on the part of third parties engaged by the Contractor.

Article 16 Dissolution

16.1 Without prejudice to the other provisions of the Contract, either Party may dissolve the Contract in full or in part out of court by registered mail, without being obliged to pay any compensation to the other Party, if the other Party is in default or compliance is temporarily or permanently impossible.

16.2 In the event of force majeure, the Client has the right to dissolve the Contract in accordance with the provisions of Article 15.

16.3 The Client may dissolve the Contract with immediate effect out of court by registered mail, without being required to send any demand or notice of default, and without being obliged to pay the Contractor any compensation, if the Contractor applies for or is granted a provisional or definitive suspension of payments, files for bankruptcy, is declared bankrupt, if its business is wound up, if it ceases trading, if a substantial proportion of its assets are seized, if it is deemed on any other grounds to be no longer capable of fulfilling its obligations under the Contract, if bribery or conflicts of interest as referred to in Article 21 occur, or if the Contractor undergoes a merger or division.

16.4 If the Contract is dissolved, the Contractor will repay the undue amounts already paid to it by the Client. If the Contract is partially dissolved, the Contractor is obliged to repay only the payments relating to the dissolved part.

Article 17 Retention of right to demand compliance

17.1 If one of the Parties fails to demand compliance with any provision within a time limit set by the Contract, this will not affect its right to demand compliance at a later date, unless the Party in question has expressly accepted the non-compliance in writing.

MISCELLANEOUS

Article 18 Documentation

18.1 The Contractor will provide the Client with clear, adequate "*as build*" drawings of the Works as finally implemented and full documentation, drawn up in English or another agreed language, on the characteristics and functionalities of the Equipment included into the Works.

18.2 The Client has the right to publish and reproduce the Documentation solely for the users envisaged by the Contract.

18.3 The Contractor indemnifies the Client against claims that third parties might enforce on the ground of a copyright accruing to them in relation to the Documentation.

Article 19 Assignment of rights and obligations under the Contract

19.1 Neither Party is entitled to transfer rights and obligations arising from the Contract to third parties without the written consent of the other Party. The other Party will not withhold its consent without reasonable grounds. It may attach conditions to its consent.

19.2 Paragraph (19.1) does not apply to the establishment of limited rights, such as the right of pledge.

Article 20 Insurance

20.1 The Contractor has taken out and will retain adequate insurance cover for business related liability, including 3rd party liability, Workmen's Compensation, as identified in the Special Conditions of Contract.

20.2 At the Client's request, the Contractor will immediately present either the original or a certified copy of the policies and proof of the payment of premium for the insurance referred to in paragraph 1, or a statement from the insurer to the effect that the insurance exists. The Contractor will not terminate or alter the insurance contract without the Client's prior written consent. The Contractor has no right to change the insured sum to the Client's disadvantage without the Client's prior written consent. The insurance premiums owed by the Contractor are deemed to be included in the agreed prices.

20.3 The Contractor assigns to the Client in advance all rights to the payment of insurance proceeds as referred to in paragraph 20.1, in so far as such proceeds relate to damage for which the Contractor is liable to the Client under the Contract. The Contractor is obliged to notify its insurance company in writing of this assignment and to send a copy of this written notice to the Client, without prejudice to the Client's right to notify the insurer itself. Any insurance proceeds paid directly by the insurer to the Client will be deducted from the amount of compensation the Contractor is required to pay to the Client in respect of the insured event.

Article 21 Bribery and conflicts of interest

21.1 The Parties will not offer to each other or to third parties, or ask for, accept or obtain a promise of, from each other or third parties, whether for themselves or for any other Party, any gift, reward, compensation or benefit of any form whatsoever if this could be construed as constituting an illicit practice. Such a practice may constitute grounds for dissolving the Contract either in full or in part.

21.2 If it transpires that one of the Client's subordinates was in the Contractor's employment, regardless of whether or not such employment was paid, during the formation of the Contract, and that the Client was not informed of this prior to the signing of the Contract, the Client may dissolve the Contract with immediate effect out of court, without being required to give any notice of default or to pay any compensation.

Article 22 Invalidity

22.1 If one or more provisions of these General Contract Conditions or the Contract are found to be invalid or are nullified by a court, the remaining provisions will retain their legal force. The Parties will consult on the former provisions in order to make alternative arrangements. The alternative arrangements must not undermine the purport of these General Conditions for the Execution of Works or the Contract.

Article 23 Follow-up order

23.1 The Contract does not entitle the Contractor to any follow-up orders.

Article 24 Long-term obligations

24.1 Provisions which by their nature are intended to persist after the Contract has been performed will remain in force after the expiry of the Contract. They include the provisions on: guarantee (Article 4), confidentiality (Article 8), non-performance (Article 13), liability (Article 14), termination (Article 16.4), documentation (Article 18), assignment of insurance proceeds (Article 20.3), and disputes and applicable law (Article 25).

Article 25 Disputes and applicable law

25.1 Any dispute between the Parties in relation to the Contract will only be submitted to the competent Court of the Solomon Islands, unless the Parties agree an alternative means of dispute resolution.

25.2 The Contract is governed by the law of the Solomon Islands.

Article 26 Final provisions

26.1 Any changes from this Contract are binding only if they have been expressly agreed by the Parties in writing.

26.2 Any written or oral agreements previously made by the Parties about the order(s) placed under this Contract for the Delivery of the Works will be nullified by the signature of the Contract.

SECTION III: SPECIAL CONDITIONS OF CONTRACT

The following Special Conditions of Contract shall supplement the General Conditions of Contract for the Execution of Works for the Solomon Islands Government. Whenever there is a conflict, the provisions herein shall prevail over those in General Conditions for the Execution of Works (GCC). The corresponding Article numbers in the General Conditions of Contract are indicated below.

GCC Article	No.	Particulars
1. Definitions	1.5	**a. THE CLIENT IS:** National Hosting Authority Solomon Islands Government P.O. Box 2443 Honiara, Solomon Islands **b. THE CONTRACTOR:** RJ & ASSOCIATES COMPANY LIMITED P.O. Box R12 Honiara-Solomon Islands Email: rejack36@gmail.com Mob: 677-7463888 **c. THE LOCATION SITE IS:** NSC Land, Burnscreek, East Honiara
	1.12, 1.13	• **THE CLIENT'S PROJECT MANAGER IS:** Graham Lilo Project Management Unit National Hosting Authority Email: GLilo@sol2023.com.sb
		• THE CONTRACT ADMINISTRATOR IS. Soleana Gagahe Contracts Manager Project Management Unit National Hosting Authority Email: SGagahe@sol2023.com.sb • CONTRACTOR'S PROJECT MANAGER Jack Resture Jnr Project Manager RJ & Associates Company Limited P.O. Box R12

		Honiara-Solomon Islands Email: rejack36@gmail.com
3. Delivery of the Works	3.1	The Works shall be completed within 90 ***days*** from the Contract Commencement date. **Note:** *For this Contract, a six-day working week is assumed. Therefore, the Works shall be completed within weeks of commencement of the Contract. The Contract commences on the day that it has been signed and countersigned by all parties to the Contract.*
4. Guarantee	4.5	The Defects Liability Period shall be one month, for quality of workmanship, from the date of acceptance of the Works. The Contractor shall, in addition, comply with the performance as specified in the Contract. If for reasons attributable to the Contractor these guarantees are not attained in whole or in part, the Contractor shall, at its discretion, either: a) make such changes, modification, and/or additions to the Works or any part thereof as may be necessary in order to attain the contractual guarantees specified in the contract at its own cost and expense
	4.6	This Contract must be supported by a duly signed Performance Securing Declaration, acceptable to the Client, in lieu of a Performance Security. The Performance Securing Declaration is at *Section VII: Annex II* (page 38) of the Contract.
5. Inspection	5.1	Inspection and tests by the Client or 3rd party in name of the Client regarding the Execution of the Works and the quality levels applied to may be implemented as follows: • The time limit for inspection and quality assurance may be always undertaken during the Execution of the Works. There is no need for the Client or their representative to announce their inspection beforehand.
6. Contacts	6.1	**THE CLIENT'S AUTHORIZED REPRESENTATIVE FOR THIS CONTRACT IS.** Leeroy Bird Executive Director Project Management Unit Email: LBird@sol2023.com.sb **THE CONTRACTOR'S AUTHORIZED REPRESENTATIVE IS:** Jack Resture Jnr Project Manager RJ & Associates Company Limited

		P.O. Box R12 Honiara-Solomon Islands Email: rejack36@gmail.com
9. Prices	9.1	The Contract price is fixed for the duration of the Contract.
	9.2	Variations of the Contract price may be granted by the employer provided the request for variation is made prior to the work being undertaken, and the variation is assessed by the Employer to be necessary and the price quoted is reasonable.
10. Payment	10.1	a) Payment for Works carried out under this contract shall be made in SBD. The Contractor is to submit a claim for Works completed. The Project Manager is to inspect the Works and if in grievance with the Contractor authorise payment of the claim. b) If there is a difference between the assessed Works complete and the claim amount the Contractor is to adjust the claim to match the value of the completed Works. c) Payment for milestone completion shall conform to the payment schedule as in section III of the Contract.
	10.6	In case payment is subject to SIG tax law, the latest information on the relevant withholding taxes and other payables are to be found at the website of the Inland Revenue Department: http://www.ird.gov.sb
11. Advance Payment	11.1	The first scheduled payment shall be the Mobilization Payment which shall be paid after the project has mobilized, materials have been delivered to site and work is ready to commence.
12. Penalty (Liquidated Damages)	12.1	Applicable rate for the Liquidated damages is: 0.1% per day.
14. Contractor's Liability	14.1	Notwithstanding Article 14.1 of the GCC, the Contractor's liability is twice the Contract value as stated in the Contract between Client and Contractor.
20. Insurances	20.1	Contractor shall provide with their tender to following proof of insurance:

		- Workmen's Compensation	As required by SI Law
		- Third Party Liability	SBD 2,000,000
		- Equipment for use in Project	Replacement Value

SECTION IV: PAYMENT SCHEDULE

This Payment Schedule is part of the Contract and is crucial part of which the Contractor shall be remunerated. This Schedule is referred to the Contractor's milestones and claims. If there are any inconsistencies of milestones claims from the Contractor, these milestones and Payment Schedule stated herein supersedes such Contractor's claims.

CONTRACT VALUE			SBD$3,212,632.13
PAYMENT NUMBER	**MILESTONE DESCRIPTION**	**AMOUNT CLAIMED**	**AMOUNT DUE PAYABLE**
Payment No. 1	Mobilization (50%) Payment shall be made prior to contractor's mobilization to site, site clearance and commencement of works.	**$1,606,316.07**	**$1,606,316.07**
Payment No.2	Progress payment of 45% shall be made upon completion of all works as required	**$1,445,684.46**	**$1,445,684.46**
Payment No. 3	5% Retention payment shall be made one months after completion and acceptance of retention rectification certifications.	**$160,631.61**	**$160,631.61**
TOTAL			**$3,212,632.13**

SECTION V: SCOPE OF WORKS/ SPECIFICATIONS

1. PROJECT BRIEF

NHA is now seeking suitably qualified firms or individuals to tender for FENCING WORK AT THE NATIONAL SPORTS COUNCIL LAND AREA AT BURNSCREEK. Works will be separated into individual contracts which will comprise of:

- **LOT 1: Fencing of 2.5km x Picket Fence at the NSC Land Burnscreek**

1.1 Location

All earth works shall be performed at the site as shown in the drawing below;

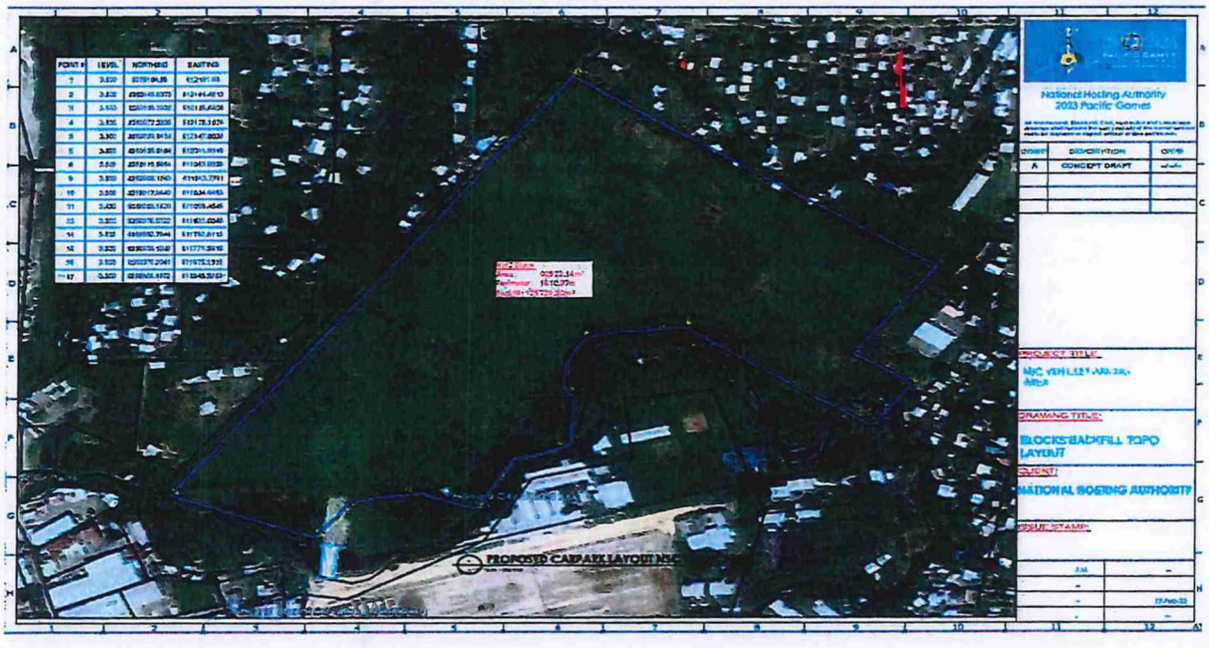

SPECIFIC SCOPE OF WORKS

The work to be performed under this contract shall consist of furnishing all plans, equipment, materials, supplies, and manufactured articles, and for furnishing all transportation and services, including fuel, power, and essential communications, and forthe performance of all labor, work, or other operations required for the fulfillment of the Contract in strict accordance with the specifications as herein defined.

PROJECT SITE:



Depicted above is the site proposed for fencing

DRAWINGS

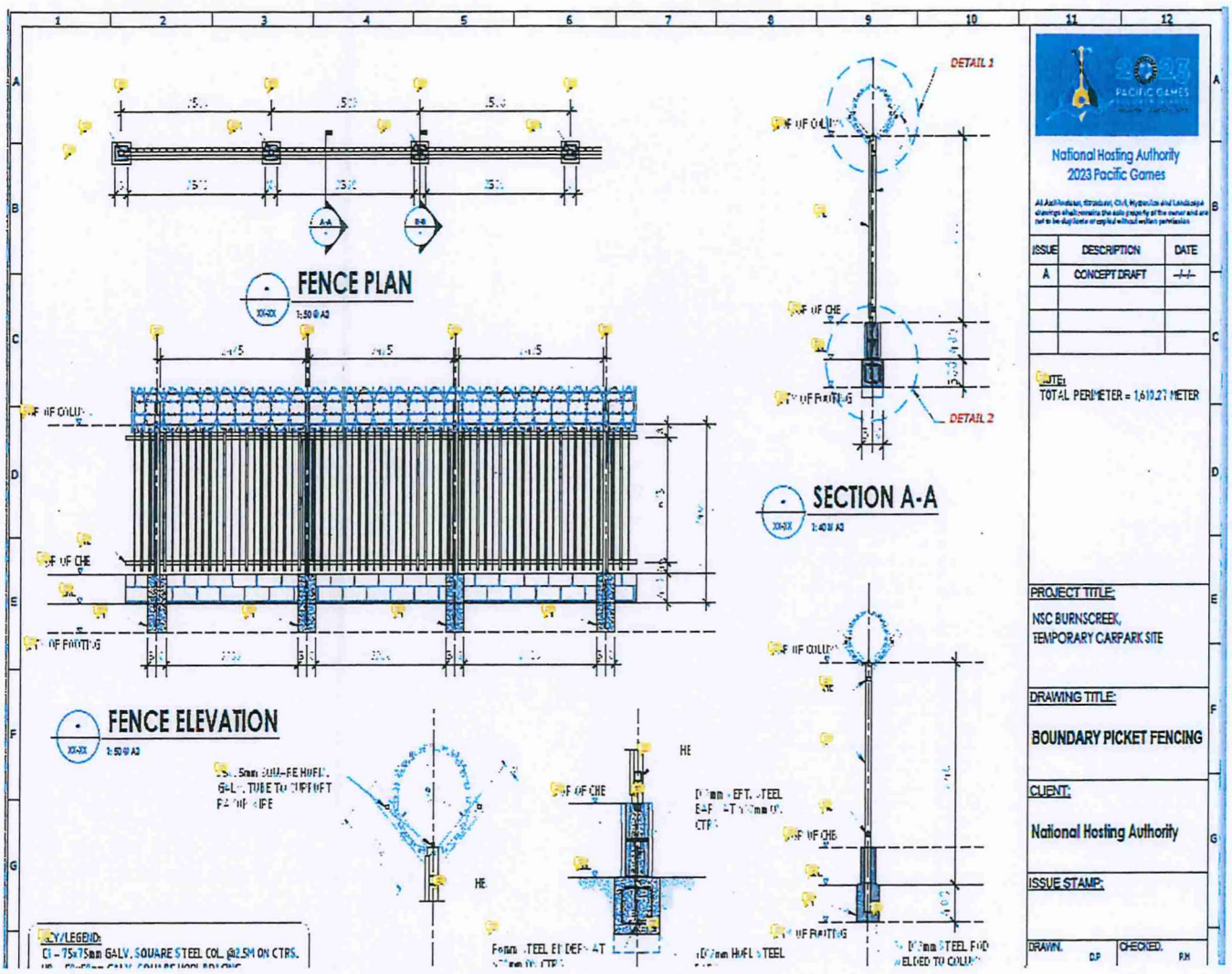
FENCE PLAN
FENCE ELEVATION
SECTION A-A
DETAIL 1
DETAIL 2
National Hosting Authority
2023 Pacific Games
ISSUE
DESCRIPTION
DATE
A
CONCEPT DRAFT
NOTE:
TOTAL PERIMETER = 1,610.27 METER
PROJECT TITLE:
NSC BURNSCREEK,
TEMPORARY CARPARK SITE
DRAWING TITLE:
BOUNDARY PICKET FENCING
CLIENT:
National Hosting Authority
ISSUE STAMP:
DRAWN.
CHECKED.
KEY/LEGEND:
C1 – 75x75mm GALV. SQUARE STEEL COL. @2.5M ON CTRS.

PRE-WORK PREPARATIONS

- While a building department permit is not required for this project, thecontractor should secure any necessary encroachment permits.
- The Contractor should secure an area on the properties to park trailers,vehicles, or any other equipment, and to place portable toilets.
- Contractor shall ensure there is electricity available on site.

SITE PREPARATIONS

- The contractor shall make sure that any shrubs or other obstructions arecleared from the fence path.
- The contractor will demolish and dispose of all existing fences:
- All pressure treated lumber must be disposed of properly.
- All old fence posts must be removed completely.
- All boards, nails, and debris must be cleaned up.
- The Contractor shall ensure that any ground that is getting dug into is clear of any utilities, wires, or pipes.

EXCAVATION

The contractor shall ensure that excavation for pad and strip footings conform to the details as in the drawings where the depth of pad footing is 400mm x 300mm with strip footing for block work is 300mm depth and 300mm width for fence foundation.

REINFORCEMENT

The Contractor shall ensure that all reinforcement for footings is D12 or 12mm rough steel reinforcements as in the drawings with stirrups as required.

CONCRETE FOOTING

Concrete shall be of 25Mpa with required quantities as in the bills of quantities.

BLOCK WORK

Contractor must build two layers of blocks of 16-inch size prior to bottom fence framing for fence panels.

FENCE POSTS

Contractor must use 75mm square posts of 2200mm spacing with top welded "Y" allow for installation of Razor Barbed wire. Any portions of the fence that are on sidewalks or retaining wall shall be mounted with surface mounting brackets with appropriate concrete anchors.

FENCE INSTALLATION AND SPECIFICATIONS

The fence shall be of 25mm square tube welded across 2000 meters as specified in the drawings.

GATES

Contractor must use 100mm square posts at the bridge linking the area and install double gate with industrial hinges and locks.

CLEAN UP

The Contractor will be responsible for all cleanup of the job site to a"broom clean" status.

If there are any areas of concrete that are stained with dirt, paint, or any other substance from construction, the Contractor will be responsible forcleaning stains to where it is free of any visible sign.

The Contractor will be responsible for reinstalling any items that wereremoved from building for the purposes of construction unless other arrangements have been made and agreed upon with NHA.

The Contactor will remove and dispose of all trash and excess unusablematerials.

The Contractor will remove all tools, equipment, drop cloths/tarps, trash(produced by Contractor), and any other items that were put there by theContractor.

MATERIALS AND EQUIPMENT

The Contractor shall supply all necessary materials, fasteners, hardware,concrete, wood, and any other items necessary to complete the project.

The Contractor shall use his/her own equipment and shall provide allnecessary tools and materials to complete the job as described.

GENERAL PROJECT AND WORKS REQUIREMENTS

1 Preliminary & General

The Contractor will be responsible for the following:

- Provision of all material and labor on site.
- High quality of workmanship and finishes by appropriately qualified personnel.
- Maintenance of site access and site storage.
- Provision of all temporary site service including, but not limited to; water, electricity, site sanitation etc.
- Protection of all works.
- Provision of site office and site storage to suit the Contractor's personnel needs.
- Connection of all permanent services to the works.
- Site cleanliness and tidiness for maintenance of safety and environment.

1.1 Health and Safety

The Contractor is to ensure safety of all personnel and the public whilst on site. It is mandatory for the Contractor to submit a Work Safe Method Statement before commencing any works on site. The Work Safe Method Statement is to be reviewed and approved by the Employer. To a minimum the following criteria must be met;

1.2 OPERATION HEALTH & SAFTEY

The Contractor is to ensure safety of all personnel and the public whilst on site. It is mandatory for the Contractor to submit a Work Safe Method Statement before commencing any works on site. The Work Safe Method Statement is to be reviewed and approved by the Employer.

2. GENERAL SAFETY REQUIREMENTS

The contractor must put controls in place to eliminate, isolate or minimize all hazards. General hazards include;

- General public
- Heavy plant (trucks reversing, excavators)
- Deep excavations
- Falling objects
- Hot works
- Working at height

2.1 PROTECTIVE EQUIPMENT (PPE)

Contractor's personnel or any visitor on site must comply, at a minimum, with the following;

Safety boots/ Footwear	Steel cap boots to be worn at all times
High Visibility (HV) Clothing	HV jacket or vest to be worn at all times.
Head Protection	Hard hat to be worn when working under falling hazards (cranes, scaffolding, double-storey structure)
Hearing Protection	Hearing protection is to be used when operating or in the vicinity of noisy equipment.

3. SPECIFIC SAFETY REQUIREMENTS

Equipment	The Contractor is to nominate the equipment to be used on site. A detailed equipment list is to be submitted as part of the Contractors tender submission. All equipment is to be in safe and working order and must all have current licenses where appropriate. Vehicles are to be operated by qualified or adequately trained personnel.
Ladders	Must be available on site and in good condition and fit for industrial use.
Scaffold	Must be in good condition and adequately assembled by trained personnel
Power Tools	Tools on site must be serviced, in good condition and adequate for the task/job carried out.
Electricity	Any works that involve the use of electricity, including temporary power during works, is to be carried out be a suitably trained and certified electrician.
Fencing	Contractor is to separate construction area from general public areas using fencing or barrier tape. The site should be a distinct isolated work area. All hazards such as open excavation also need to be clearly marked or fenced.
Signage	Contractor to erect appropriate warning signage at work site. A project signboard is to be installed at the site entry at the commencement of works. Project sign board needs to be approved by Employer's representative prior to erection.
Storage	Materials are to be stored in an appropriate and safe manner; and in accordance with any relevant material safety data sheet (MSDS).
Waste	All waste is to be collected and moved to a location identified and approved by Employer's representative as a waste disposal area.
Ablution	The Contractor should provide adequate ablutions for all personnel or visitors on site. Ablutions must be cleaned on a regular basis to maintain adequate hygiene standards.
Access	Site must have a designated entry and exit point. The entry and exit point should be clearly signed and located to provide minimal disruption to the public.
Authorised Personnel	Only authorised personnel allowed on site – appropriate signage must be in place to communicate this.
Evacuation Plan	An emergency evacuation and management plan must be in place

	and made known to all on site.
Fire fighting	Fire extinguishers must always be available on site and positioned in areas for ease of access in emergency.
First Aid	A first aid kit must always be available on site. The Contractor is to ensure that at least two of the Contractor's personnel on site at any time are adequately trained and certified in First Aid.
Emergency Response	Emergency response (Police, Ambulance, Fire Brigade) numbers must be available and displayed on site in event of an emergency.
Drug & Alcohol	No smoking, alcohol consumption or chewing of betel nut is permitted by the Contractor or staff. No illicit drug of any type are to be present or in use on site.
Child Protection	Children are not allowed on site at any time and no worker is ever to accompany a child on site without the expressed approval of the Employer's representative.

4. QUALITY

The Contractor is to ensure a Quality Management System (QMS) is maintained throughout the
duration of the Works. To a minimum the QMS must ensure the following is maintained.

- Quality management plan.
- Quality management records (testing records, compliance certificates).
- Internal quality audits.
- Nonconformance and corrective actions list.

The Contractor must present the QMS and Quality management plan to the Employer's representative for approval before the Works can commence.

5. ENVIRONMENT

Environmental measures for the project are to include:

- All waste is to be removed from site and disposed of as per Local Authority requirements.
- No waste is to be burnt on site.
- Protective measures must in place to ensure that no run off from the site goes into nearby
- waterways.
- Any spill of chemicals, diesels or hazardous materials are cleaned up immediately.
- All hazardous materials are stored in a safe place and in a way that spillage will not

harm the environment.

6. PROJECT ADMINISTRATION

Authorized Representative	The Contractor must nominate an authorized representative for all external communications. The authorized representative must be suitably qualified and fluent in the language of English. All communications between parties should be in English.
Pre – Start Meeting	A prestart meeting will be held at the site prior to the commencement of the Works. The objective of the prestart meeting is to confirm the project outcomes, responsibilities and relationships for the project. Attendees at the meeting are to include representatives of the Contractor, Employer and relevant authorities.
Project Meetings	Project Meetings should be held on a fortnightly basis during the contracted period of Works. Attendees should include representatives of the Contractor and Employer. Project meetings may also be held as required at the request of the Employer or the Contractor.
Project Reporting	The Contractor is to submit weekly and monthly project reports and summaries. These reports should detail to a minimum: • Project progress and timeline update • Key issues and blockages • Pending approvals • Safety summary • Quality summary • Equipment summary • Staff records • Photographic records • Project Finance update
Payment Claims	Payment Claims are to be presented to the Employer's Representative /Project Manager whenever work associated with a milestone payment has been completed. Proof of completion of the milestone in the form of a monthly site report showing the completed work and a statement from the Contractor must accompany the Payment Claim. Payment Claims will be reviewed by the Employer's representative/Project Manager for approval. Once approval has been provided the Contractor can submit an invoice for payment.
Work Hours	Work hours are generally to be 8.00am to 5.00pm Monday to Friday. Extended work hours can be requested by the Contractor and approval provided by the Employer's representative.

7. Earthworks

Earthworks is to include, but not limited to, all clearing and grubbing, excavation, trenching, shoring, backfilling, removal of spoil material and placement of fill material. All excavation is to be conducted in a safe manner using nominated equipment. All equipment used in excavation is to be nominated in the Contractor's Safe Work Method Statement.
All excavation related activities on site are to be compliant with design documentation and approved by the Employer's representatives.

Clearing and Grubbing

Clearing and grubbing operations shall be carried out in the following areas as relevant:

- Areas where general earthworks are to be constructed, plus a margin of 3m or to property boundaries; whichever is the lesser.
- Areas specified for visibility.
- Other areas as indicated on the drawings.

Disposal of Cleared and Grubbed Materials:
Materials that comply with the requirements specified may be used in the Works, otherwise the material shall be removed from the Site or if approved, be disposed within the Site.

Excavation Dewatering Allow to drain all foundation excavations to special low-level sumps, located away from the permanent works. Excavation shall remain dry for duration of the work, and prior to placing of hard fill or site concrete. Prevent all water flow over freshly laid work.

Backfilling

Bring all filling on to the site unless it can be provided from soil recovered from the site. Filling shall be sound material, free of perishable material or any material that will not form stable fill. The fill shall be the best of the clean inorganic excavated material, fully stabilised as approved by the site supervisor.

ConsolidationBackfill around all foundations with approved backfill material and compact by approved mechanical means. Place in layers of 150mm loose depth to levels shown on the foundation drawings. Consolidate each layer to at least 100% standard of the maximum dry density available at standard effort before proceeding to next layer. Materials are to be spread so as not to disturb subgrade and shall be placed in uniform layers with each layer interlocking the layer below. Placing procedures shall ensure minimum segregation.

Backfilling for Specific Structures

Under floor slabs on fill provide 150mm minimum thickness of approved crushed coral fill, blinded with a 50mm layer of sand or similar approved fine material so as to produce a surface which will not damage the damp proof membrane overlay. Hard fill shall be placed in layers not exceeding 100mm loose depth and shall be smooth wheeled roller (5 tonne), or vibrating roller with equivalent compactive effort to 100% standard of the maximum dry density. It will be noted that concrete floors will be supported off this filling.

Top Soil

Where possible stockpile topsoil for re-spreading for future landscape works as necessary.

Definitions

ROCK: Any natural or artificial material encountered in the excavation which cannot be removed until broken up by explosives or mechanical means such as, jackhammer or percussion drills.

OTHER THAN ROCK: All other material encountered in excavation.

Rubbish

Rubbish or debris is not to be buried on site. Remove all rubbish from the site.

SERVICE TRENCHES

Excavation

If practicable, make trenches straight between manholes, inspection points and junctions, with vertical sides and uniform grades.

Trench widths

Keep trench widths to the minimum consistent with the laying and bedding of the relevant service and construction of manholes and pits.

Backfilling

General: Backfill service trenches as soon as possible after laying the service. Place backfills in layers. Compact each layer to a density sufficient to minimise settlement.

Backfill material: Excavated spoil or well graded inorganic material with maximum particle size of 75 mm.

Next to services: Do not place any particles greater in size than 25 mm within 150 mm of services.
Under paved areas: Coarse sand, controlled low strength material or fine crushed rock.

Shoring

The Contractor/local builder shall shore up as necessary, and batter the faces of excavations. The stability of soil faces during excavation work will be entirely the responsibility of the Contractor who shall make good any damage which may occur as the result of soil failure.

Where excavations at different levels are adjacent, the sides of the lower excavations shall be supported in such a manner that the bearing capacity of the retained soil is not impaired.

SECTION VII: ANNEXES TO THE CONTRACT

ANNEX I: TENDER AWARD LETTER

ANNEX II: PERFORMANCE SECURING DECLARATION

ANNEX IV: CONTRACTOR'S PRICED BILL OF QUANTITIES

ANNEX V: CONTRACTOR'S INSURANCE CERTIFICATE

ANNEX VI: CONTRACTOR'S HONIARA CITY COUNCIL BUSINESS LICENSE

ANNEX VII: CONTRACTOR'S COMPANY HAUS CERTIFICATE

ANNEX VIII: CONTRACTOR'S INLAND REVENUE TAX CERTIFICATE

ANNEX IX: CONTRACTOR'S WORK SCHEDULE

00055553

HONIARA CITY COUNCIL
BUSINESS LICENCE - 2024

Honiara City Council (Regulation of Business Licences)

A business licence is hereby issued for the following business (es.) in accordance with section 4(1) of the Honiara City Council (Regulation of Businesses Licences) Ordinance.

Code	Type of Business
BLC02	**Building Contractors - L/O**

Issued to:	**RJ & Associates Company Ltd**
Address:	**P. O Box R12** **Honiara** **Solomon Islands**
Business Name:	**RJ & Associates Company Ltd**
Business premises location:	**Honiara**
Licence Expiry Date:	**31 st December 2024**

Amount of fee paid: **$4,200.00** Receipt Number: **017403**

Business Licence fees are imposed pursuant to section 4 (1) of the Honiara City Council (Regulation of Business Licence) Ordinance and section 4 and Schedule 2 of the Honiara City Council (Fees Rates and Charges) 2024.

The Business Licence holder is asked to:

1. Display the licence in a prominent and easily visible place
2. Allow the licence to be inspected by Council Officers when requested
3. Notify the Business Licence Officer, Honiara City Council if or when information stated in the above licence changes

Business Registration Number 20203064

Approved by:

City Clerk

8/2/24

CERTIFICATE

the company haus

Certificate of Incorporation

(Pursuant to section 7 of the Companies Act 2009)

RJ & ASSOCIATES COMPANY LIMITED

20203064

This is to certify that RJ & ASSOCIATES COMPANY LIMITED was incorporated under the Companies Act 2009 on 30 July 2020.

Kuriah Pitamama
Registrar of Companies
30 July 2020

REGISTRAR OF COMPANIES
SOLOMON ISLANDS

To check the validity of this certificate enter http://www.solomonbusinessregistry.gov.sb/sb-br-companies/verify/20203064/COMPANIES-14613501.html in your browser. Certificate generated 30 July 2020 09:42 AM SBT

IMPROVING THE LIFE OF SOLOMON ISLANDERS
Inland Revenue Division Solomon Islands

SR 100
04 October 2021

RJ & ASSOCIATES COMPANY LIMITED
White River
West Honiara
Honiara, Guadalcanal

TIN: 1249666

Dear Sir/Madam,

otification of Registration (RJ & ASSOCIATES COMPANY LIMITED)

he above business has now been registered with the Inland Revenue Division. Please note the llowing:

ax Identification Number (TIN) – 1249666

he above named is registered for the following taxes:

- Stamp Duty
- Withholding Tax

e TIN, (1249666), should be written on all payment forms, returns, correspondence or other alings with IRD. The same TIN is used for all tax types (e.g. Income Tax, PAYE, Goods Tax etc.)

ou have registered for Sales or Goods Tax an officer will be in contact in relation to the issuing of ecial certificates that you may require for these taxes.

ou are unsure of your obligations or would like any additional information, please contact the xpayer Education Team on phone 21493 for assistance.

rs faithfully

Maenu'u
oliance Officer
Education Team