2023 PACIFIC GAMES OFFICE

Approval /Signature Required

Supplier Name: SSS Ltd - 5% Retention - Construction of Line-drainage System from Main Stadium to SINIS

1) Minute	☑	Sign by ED			
2) Requisition	☑	Compliance Officer		Sign by ED	
3) Payment Voucher	☐	Sign by FC		Sign by ED	
4) LPO	☐	Sign by FC		Sign by ED	
5) IB Authorisations	☐	Sign by FC		Sign by ED	

Comments:

Transaction or Request Lodgement Receipt

Transaction or Request Description:	ANZ to ANZ Transfer
Transaction or Request Status:	Posted
Date / Time:	30/01/2024 12:54
Transaction Number:	AHR57251

Transaction Details:

Account Transfer of SBD 115,326.00

From Account: 5691140
To Account: 4850726

Notes for Recipient: Drainage Works
Notes for Myself: Retention West End Stadium

Pay Date : 30/01/2024

PAID DATE 6/2/24 CHQ. No.

Comments:

* * * * * * * * * * Authorisation Details * * * * * * * * * * *
30/01/2024 12:54 Pauline Tovua
Authorisation Required for : Transfer Between My Accounts (2A)
03/02/2024 12:42 Christian Nieng
Authorised -Transfer Between My Accounts
Comments : Verified
06/02/2024 12:48 Debbie Ofaeri Sifoni
Authorised -Transfer Between My Accounts
06/02/2024 12:48 Debbie Ofaeri Sifoni
Transaction Processed
* *

©Copyright Australia and New Zealand Banking Group Limited ABN 11 005 375 522, 1996-2024. ANZ's colour blue is a trade mark of ANZ.

Your Reference

*** Important Information displayed on ANZ Internet Banking screen is not shown on this printout**

Held for Authorisation
Transaction Number AHR57251

Transaction Details

Account Transfer of SBD 115,326.00

From Account: 5691140
To Account: 4850726

Notes for Recipient: Drainage Works
Notes for Myself: Retention West End Stadium

You can view the status and details of your transactions and requests for the last 12 months via ANZ Internet Banking.

3/2/24

NATIONAL HOSTING AUTHORITY
P O Box 2443
Honiara, Solomon Islands
E:Accounts@sol2023.com.sb

PAYMENT VOUCHER

DATE 16/01/2024

SSS Construction Limited
P O Box 15
Honiara
Solomon Islands

Cheque Number IB TRANS

Total Amount Paid $115,326.00

Final Payment No.04 (5%) for completion of a concrete-Lined drainage at stadium west end to SINIS - Lot: 2.

In Payment For the following invoices:

Supplier Inv	Purchase No.	Invoice Date	Invoice Amount	Previous Payments	Current Payment
SC/0923/17	00001760	15/09/2023	$2,306,520.00	$2,191,194.00	$115,326.00

NATIONAL HOSTING AUTHORITY
FINANCIAL CONTROLLER
SOL2023 PACFIC GAMES
16/01/24

16/01/24.

Payment Voucher Prepared By: _____ Date: 16/01/24

Signature of Claimant: _____

PRINT NAME: _____

SSS Construction LTD
4850726
ANZ

NATIONAL HOSTING AUTHORITY

REQUISITION NUMBER: PMU - 1316/23

DEPARTMENT: PMO.

PURCHASE REQUISITION

QUANTITY	UNIT	DESCRIPTION (Full and clear details of payment)	PURCHASING OFFICER USE ONLY: SUPPLIER	ORDER NO.	COST
		Payment progress 4 of 5% retention after the completion of DLP for the construction of Lelie - Drainage System from Main Stadium to SINGS, NOT 2	SSS LTD		$115,326-00
				TOTALS	$115,326-00

Approval is requested to incur expenditure on the above

Estimated Cost (SBD): $115,326-00 Date: 22/12/23

Requisition Officer (Name): SOLOMON GOLOMAE Sign:

Account Code: 6-2717

Account Name: OTHER COSTS

Funds available on this account:

Supervisors Certification (Accountable Officers):

Certifying Officer (Name): LEEROY BIRD Sign:

Post: ED (PMO)

Department: CFC-PMO

Authority is granted for expenditure not exceeding:

SBD$ 115,326.00

Signed: 15/1/2024

P.P. Name: CHRISTIAN NIEN

Note: Authority for expenditure must be given by accounting officer or his/her deligated

Threshold Checklist

Payment requires one quote (10,000 below)	
Payment requires three quotes ($10,000.00 above)	
Is it a ITB Contract Payment	
Is it a GTB Contract Payment	
Payment is a Bid Waiver	

Compliance Check by: Signature

Name: Jeff Mekoi Date: 11/01/2024

Position: Compliance

16/01/24.

16/01/24

Copy 1 White NHA Finance
Copy 2 Pink Compliance Department
Copy 3 Yellow Requesting Department

NATIONAL HOSTING AUTHORITY
XVII 2023 PACIFIC GAMES

C/-P.O. Box 2443
Honiara
Solomon Islands

Phone:
677 7308800

Facebook page:
Sol2023 XVII Pacific Games

MEMORANDUM

To: Executive Director, NHA

Thru: Leeroy Bird, Executive Director, PMU

From: Brolin Lae, PMU

NHA Ref: **BL-211223**

Date: Tuesday, 21st December 2023

SUBJECT: **Payment 4 – (5%) RETENTION PAYMENT FOR THE COMPLETION OF THE DEFECTS LIABILITY PERIOD AND THE SATISFACTION OF ALL RECTIFIED DEFECTS BY THE CONTRACTOR – U-DRAINAGE IMPROVEMENT FROM NATIONAL STADIUM TO SINIS**

Dear Executive Director,

Please find enclosed the invoice from 'Solomon Sheet Steel (SSS Ltd)' for payment No. 4, which serves as Retention for the construction of Concrete Lined Drainage System at National Stadium Westend to SINIS.

As per the terms outlined in Section IV of the contract agreement (U-Drainage improvement from National Stadium to SINIS) between the NHA and SSS Ltd, payment No. 4 is due upon the completion of the 1-month defection liability period and the satisfactory rectification of all necessary defects related to the Concrete Line-Drainage System at Stadium Westend to SINIS.

The total payment amount is therefore rendered to be **SBD$ ONE HUNDRED FIFTEEN THOUSAND AND THREE HUNDRED & TWENTY-SIX DOLLARS ONLY ($115,326.00)** payable to Solomon Sheet Steel (SSS) Limited.

Kindly request approval for the payment to be processed accordingly.

Yours Sincerely,

Brolin Lae
Project Engineer (Stormwater)

P.O. BOX 2443 Sea King Restaurant Building, Honiara, Solomon Islands

PROGRESS PAYMENT CERTIFICATE NO: 04

Payment Schedule Name:	Payment No. 4		
Project Name:	U-Drainage Improvement from Main Stadium to SINIS Lot 2		
Lot:	Lot 2 - U-Drainage Improvement from Main Stadium to SINIS		
Contractor:	Solomon Sheet Steel (SSS) Limited		
Project Engineer	Brolin Lae	**Certificate:**	PC - 04
Contract Administrator:	Soleana Gagahe	**Date Invoice Received:**	
		Date Issued for payment:	
		Contract No:	

A PROGRESS CLAIM SUMMARY

REF	PROGRESS CLAIMS	CONTRACT DETAILS	PAYMENT DETAILS	NOTES
	Contract Value	$ 2,306,520.00		
1	Payment 1 (50%) - MOBILISATION	$ 1,153,260.00	Mobilisation payment prior to Works & site mobilisation	**Paid**
2	Payment 2 - 30%	$ 691,956.00	Completion of excavation, backfill, compaction, formworks, and concrete pouring.	**Paid**
3	Payment 3 -15%	$ 345,978.00	Completion of all works as required in the scope of works and demobilize from site.	**Paid**
4	Payment 4 - 5%	$ 115,326.00	Retention_1 month defects liability period	**This Claim**
5				
8	**Progress Claim to date**	**$ 2,191,194.00**		
9	**Original Contract Value**	**$ 2,306,520.00**		
10	**Total Adjusted Contract Value**	**$ 2,306,520.00**		
11	**Balance of Contract Payment**	**$ 115,326.00**		

B PAYMENT DETAILS

	Progress payment for this claim	$ 115,326.00	
		$ -	
	Amount payable for Retention	$ 115,326.00	

Payment is certified as conform to payments terms and conditions as stated in Article 10 Invoicing and payment & Section IV: Payment Schedule of the Contract (Contract No: GTB-GFC24/22)

Payment is hereby certified: ..... *Brolin Lae (Project Engineer)* — 22/12/23 *Date*

Compliranced and approved by: ..... *Contract Manager (Soleana Gagahe)* — 22/12/23 *Date*

Claim is hereby approved for payment by: ..... *Executive Director (Leeroy Bird)* — 22/12/23 *Date*

On presentation of this original to the Employer, the Contractor is entitled to payment within the period stated in the Contract Agreement: Article 10.

SSS Construction Limited

(Company No. 20128825)
P. O. Box 15, Honiara, SOLOMON ISLANDS.
Telephone: +677-23884 ***Fax:*** +677-21696
Email: *sss@business.com.sb*

National Hosting Authority
Project Management Unit-National Hosting Authority
Honiara, Solomon Islands

Date: 19 October 2023

Attention: Peter Himane

Contract Name : **Contract for the Construction of Line Drainage at KGVI Plot 2 Façade Lot 1 and U Drainage Improvement From main Stadium to SINIS Lot 2**

Invoice no. : SC/1023/27

Item Description	Amount $
Being for Contract Value of SBD $2,306,520.00	
Total value of works previously certified	2,191,194.00
Add: Retention Claim (Payment 4)	115,326.00
Total value of works completed to-date	2,306,520.00
Less: Total amount previously certified	(2,191,194.00)
GRAND TOTAL THIS CLAIM	115,326.00

Note: SSS Construction Ltd is Exempted from Withholding Tax as per Certificate attached.

IMPROVING THE LIFE OF SOLOMON ISLANDERS
Inland Revenue Division Solomon Islands

15th December 2022

The Manager
SSS Construction Limited
PO Box 138
Honiara
Solomon Islands

Dear Sir,

Re: Request for Withholding Tax Exemption for the year 2023

I refer to your letter dated 02 November 2022 regarding the above.

I am pleased to inform you that the Commissioner of Inland Revenue Division has considered and approved **SSS Construction Limited – TIN 1039672,** withholding tax exemption for the whole of 2023, pursuant to section 37(2) of the Income Tax Act.

This exemption is granted on the conditions that you must:

- Pay your provisional tax assessed on time and in full and
- Lodge your income tax returns by the due date or extended due date

Your exemption will be withdrawn if the above conditions are not met.

This exemption is effective **1st January and expires 31st December 2023**

Yours faithfully,

INLAND REVENUE DIVISION SOLOMON ISLANDS

Polycarp Paea
Assistant Deputy Commissioner - Compliance
For: Commissioner Inland Revenue.

CONCRETE-LINED DRAIN INSPECTION CHECKLIST

PROJECT:	U-Drainage Improvement from Main Stadium to SINIS Lot 2		
CLIENT:	National Hosting Authority	**Date:**	22/12/2023
CONSULTANT:		**Location:**	KG West
CONTRACTOR:	Solomon Sheet Steel (SSS) Limited	**Insp. No.:**	

Sl. No.	Activity/ Item	YES	NO	Comments
1	**Structural Integrity:**			
	Inspect the concrete U-drain structure for cracks, spalling, or signs of structural damages.	✓		OK
	Check the stability and integrity of the cross culvert and the wing walls.	✓		OK
2	**Surface Finish and Coating:**			
	Examine the concrete lining for signs of deterioration, such as discoloration.	✓		OK
	Check for peeling or damaged protective coatings, if applicable.	✓		OK
3	**Drainage Performance:**			
	Verify that the U-drain and cross culverts are effectively draining water without any blockages.	✓		OK
	Inspect inlet and outlet structures for proper functioning and clear water pathways.	✓		OK
4	**Joints and Seals:**			
	Inspect joints for signs of wear, displacement, or degradation.	✓		OK
	Check seals and sealants for effectiveness in preventing water infiltration.	✓		OK
5	**Vegetation and Erosion Control:**			
	Inspect vegetation around the U-drain for signs of erosion or damage.	✓		OK
	Check erosion control measures, such as riprap or geotextiles, for stability and effectiveness.	✓		OK
6	**Surrounding Area:**			
	Examine the grading and terrain around the U-drain to ensure proper drainage away from the structure.	✓		OK
	Check for any signs of soil erosion or settlement near the U-drain.	✓		OK
7	**Documentation and As-Built-Plans:**			
	Review project documentation, including as-built drawings, to confirm the completed construction matches the original design.	✓		OK
	Ensure that inspection reports, test results, and other relevant documents are up-to-date and available.	✓		OK
8	**Surounding Facilities Impact:**			
	Assess the impact of the U-drain on the surounding facilities, including traffic flow, drainage efficiency, and any complaints received during the	✓		OK
9	**Maintenance Needs:**			
	Identify any maintenance requirements, such as cleaning, repairs, or resealing joints, to ensure the continued functionality and longevity of the U-drain.	✓		Contractor to do the cleaning up
10	**Contractor Responsibility**			
	Verify that the contractor fulfills their responsibilities outlined in the construction contract, especially concerning defect rectification during the	✓		OK

Remarks:

Checked by:

Name: Brolin Lae **Position:** Project Engineer (Stormwater) **Signature:**

21th December 2023
STORMWATER_DECEMBER 2023-RETENTION REPORT.docx

NHA Ref: BL-211223

Leeroy Bird
Executive
Director
Project Management
Unit Games Facilities
Committee
National Hosting
Authority
Old Sea King Building, Point Cruz, Honiara, Guadalcanal
SOLOMON ISLANDS

To Executive Director PMU,

PROJECT: STORMWATER
SUBJECT: DEFECTS LIABILITY COMPLETION REPORT – DECEMBER 2023
CONTRACTOR: SOLOMON SHEET STEEL (SSS) LIMITED

1 INTRODUCTION

1.1 This report is for the completion of the Defects Liability Period for the Line-Drain at Stadium western end to SINIS.

1.2 The project involves the construction of a 340 meters concrete line-drain to improve the drainage system from the national stadium to SINIS at KG West. The drainage improvement would also provide reinforcement support to the nearby newly upgraded Kukum Highway from erosion during heavy rainfall period.

1.3 The Line-Drain at Stadium western end to SINIS Project was contracted to Solomon Sheet Steel (SSS) Ltd after a single waiver tender was made on preferred contractors which identified SSS Ltd for the works. The project commenced on 19th September 2023 and was completed on 3rd November 2023 with a Defects Liability Period of 1 month.

1.4 Therefore, this report covers possible defects observed upon inspection by the Site Engineers of NHA (Project Management Unit) within the duration of the Defects Liability Period.

2 PROGRESS TO DATE/ WORK SCHEDULE

2.1 Within the duration of the Defects Liability Period there have been no major defects to the completed works upon inspections. The drainage system has been working as intended providing convenient channel for stormwater flow directed towards the discharge point. However, as with all drainages the newly improved U-drainage from the main Stadium to SINIS would be requiring routine maintenance in order to clear debris and rubbish to minimize blockage.

2.2 Overall, the concrete U-drainage improvement has tremendously been helpful during the period of the Sol2023 games by improving the stormwater management within and around the KG West Kukum Highway Vicinity.

PHOTOS



3 CONCLUSION

3.1 The U-drainage improvement from the main stadium to SINIS at KG West is now completed with no major defects being observed on the structures. The NHA PMU Stormwater team is fully satisfied with the completed works upon final inspection at the end of 1-month Defects Liability Period.

Yours faithfully,

Brolin Lae
Project Engineer (Stormwater)
Project Management Unit
Games Facilities Committee
National Hosting Authority
(+677) 7464264

PACIFIC GAMES
SOLOMON ISLANDS
PROJECT MANAGEMENT UNIT
NATIONAL HOSTING AUTHORITY

Certificate of Final completion

(Defects period Lapse)

Date: 18/12/23

Contract Name: U-Drainage Improvement from Main Stadium to SINIS Lot 2

Contract No:

Defects Period: 3rd November to 3rd ~~December~~ January 2023 (2 month)

Date of Issuance of Practical Completion: 3rd November 2023

Name of Contractor: Solomon Sheet Steel (SSS) Limited

The works performed under this contract has been inspected by the authorized project engineer representing Project Management Unit of National Hosting authority for the Contract mentioned as U-Drainage Improvement from Main Stadium to SINIS Lot 2 at KG West is hereby declared complete on this date of 22nd Dec 2023.

There were no defects associated with the completed works being observed at ending of the Defects Liability Period.

Project Management Unit of National Hosting Authority hereby accepts final completion with a lapse of defects period.

.....	.....	.....
Brolin Lae	**Solcana Gagahe**	**Leeroy Bird**
Project Engineer	**Contracts Manager**	**Executive Director**

Contractor hereby accepts construction project as finally complete:

.....	.....
Project Engineer	**Project Manager**
SSS Ltd (Contractor)	**SSS Ltd (Contractor)**

PACIFIC GAMES
SOLOMON ISLANDS
PROJECT MANAGEMENT UNIT
NATIONAL HOSTING AUTHORITY

Date: 22/12/23

DEFECTS COMPLETION REPORT CERTIFICATE

To: Jason Lee **Managing Director** *(The Contractor)*	**To: Leeroy Bird** **Executive Director** **National Hosting Authority, Project Management Unit. PMU** *(The Employer)*
Contact person: Jason Lee	**Contact person: Brolin Lae**
Address: C/ P.O.Box 15, **Honiara, Solomon Islands**	**Address: Sea King Building** **P.O. Box 2443, Honiara, SI**
Telephone: +677-23884	**Telephone: 7464264**

Contract no: -
Contract title: Line-Drain Improvement from National Stadium to SINIS

DEFECTS CERTIFICATE			
	day	**month**	**year**
Completion achieved on:	**3rd**	**November**	**2023**
The end of the last *defects correction period* is:			
The *defects date* is:			
This Defects Certificate Date is: (at the later of the *defects date* or the end of the last *defects correction period*)			

Defect reference	**List of Defects modified before the *defects date* which the *Contractor* has not corrected** (or if there are no such Defects, a statement that there is none.)
	No Defects were observed upon inspection

Works checked and certified by the Project Engineer:

.....	BROLIN LAE	22/12/23
Signature:	*Name:*	*Date:*

Final Approval Certificate

It is hereby certified that in accordance with the provisions of the General Conditions of Contract, that the above-mentioned works have been completed and all defects have been corrected in accordance with the provisions of the Contract.

Certified by the Engineer: EXECUTIVE DIRECTOR (PMO)

.....	Leeroy. B	22/12/23
Signature:	*Name:*	*Date:*

PACIFIC GAMES
SOLOMON ISLANDS

CONTRACT AGREEMENT

FOR

CONSTRUCTION OF LINE DRAINAGE AT KGVI PLOT 2 FAÇADE LOT 1 AND U-DRAINAGE IMPROVEMENT FROM MAIN STADIUM TO SINIS LOT 2

BETWEEN

NATIONAL HOSTING AUTHORITY

(Solomon Islands Government)

AND

SSS CONSTRUCTION LIMITED

September 2023

Table of Contents

SECTION I: CONTRACT AGREEMENT 2
SECTION II: GENERAL CONDITIONS OF CONTRACT 5
SECTION III: SPECIAL CONDITIONS OF CONTRACT 15
SECTION IV: PAYMENT SCHEDULE 18
SECTION V: SCOPE OF WORKS/ SPECIFICATIONS 20
SECTION VI: SPECIFICATIONS & GENERAL REQUIREMENTS 21
SECTION VII: SITE SETOUT & DRAWINGS 27
SECTION X: ANNEXES TO THE CONTRACT 33

SECTION I: CONTRACT AGREEMENT

This Contract Agreement is made between the two parties mentioned as the Purchaser and Contractor herein described as below.

The Purchaser

The Purchaser herein named as the Government of the Solomon Islands, which has its seat in Honiara, represented by the **National Hosting Authority**, legally represented in this matter by **Dr Jimmie Rodgers**, the **Chairperson**, hereinafter referred to as the Purchaser,

And

The Contractor:

The Contractor herein named as **SSS Construction Ltd** which has its registered office in Honiara, legally represented in this matter by **Mr Bassanio Lee**, hereinafter referred to as the Contractor, and have agreed to **Construction of U-Drainage from Main Stadium to SINIS Lot 2** herein mentioned as Works specified in the Scope of Works.

1. The price of the execution of Works is confirmed in the Schedule of Estimated Quantities as part of your submission dated **28th August 2023.**

2. The total accepted Bid Price shall be Solomon Islands Dollars of **Two Million, Three Hundred six Thousand-Five Hundred Twenty Dollars ($2,306,520.00**). The agreed price for the execution of the Works is fixed for the duration of the Contract.

3. The place where the Works have to be executed shall be at Main stadium to SINIS highway, East Honiara-Solomon Islands.

4. The time limits for execution of the Works shall be maximum of 6 weeks and shall be on the basis turnkey specific contract process.

5. The Contractor shall strictly comply with the terms and conditions as mentioned in the Special & General Contract Conditions for the Execution of Works and the Technical Specifications/Bill of Quantities/Drawings. Any general and special terms and conditions drawn up by the Contractor do not apply.

6. The Contractor, herein **SSS Construction Ltd** shall make invoice(s) to the Purchaser at the Address mentioned as project Management Unit of National Hosting authority, quoting the, the amount of progress payment as per schedule and above-mentioned Contract number and name.

7. This Contract is subject to the provisions of the attached General Conditions of Contracts for the Execution of Works.

8. This Contract is made up of the following documents, in order of precedence:
    - *This Contract Agreement*
    - *The Special Conditions of Contract;*
    - *The General Conditions of Contract;*
    - *Payment Schedule*
    - *Scope of Works/ Specifications*
    - *Specifications & General Requirements*
    - *Site Setout & Drawings*
    - *Annexes to the Contract*
    - Tender Award Letter
    - Performance Securing Declaration
    - Contractor's Priced Bill of Quantities
    - Contractor's Insurance Certificate
    - Contractor's HCC License
    - Contractor's Company Haus License
    - Contractor's Inland Revenue Division Tax Certificate
    - Contractor's Work Schedule

The various documents making up this shall be deemed to be mutually explanatory; in cases of a different interpretation, the documents shall prevail in the order in which they appear above.

SIGNING OF CONTRACT AGREEMENT

This Contract enters into force on the date on which it is signed by both Parties [and ends as soon as the Execution of the Works has been completed].

IN WITNESS whereof the parties hereto have caused this Agreement to be executed in accordance with the laws of Solomon Islands on the day, month and year specified above.

Parties to this Contract hereby agreed and signed as follows:

For the Purchaser - National Hosting Authority		**For the Contractor**	
Name:	Christian Meng	**Name:**	Mr Bassanio Lee
Signature:		**Signature:**	
Designation:	Executive Director National Hosting Authority	**Designation:**	Managing Director SSS Construction Limited
Date:	14../09../2023	**Date:**	13./09./2023

Witness signing by Project Management Unit/NHA

Signature	.....
Name:	Leeroy Buri
Title:	Executive Director PMU
Date:	13./09../2023

SECTION II: GENERAL CONDITIONS OF CONTRACT

The terms in these General Conditions of Contract for the Execution of Works for the Government of the Solomon Islands are defined as follows:

1.1 **SPECIFICATIONS AND PERFORMANCE REQUIREMENTS:** a document attached to the Contract which, when initialled by both parties, forms part of the Contract.

1.2 **DOCUMENTATION:** the manuals or other user instructions accompanying the installations and equipment included as part of the works, in English or another language agreed between the Parties.

1.3 **EXECUTION OF WORKS:** these General Conditions of Contract for the Execution of Works, which apply to and form part of the Contract.

1.4 **INSPECTION:** the inspection of the Works for visible defects and non-conformity carried out at the Purchaser's request on the Contractor's site prior to Delivery.

1.5 **PURCHASER:** The Government of the Solomon Island or any other Government agency using these General Conditions of Contract for the Execution of Works.

1.6 **CONTRACTOR:** The Purchaser's counterparty.

1.7 **DELIVERY:** the delivery of the Works referred to in Article 3.1, including its assembly or installation in accordance with the requirements set out in the Contract.

1.8 **CONTRACT:** the written agreement between the Purchaser and the Contractor to which these Purchasing Conditions are declared to be applicable.

1.9 **PARTY:** The Purchaser or the Contractor, depending on the context.

1.10 **WORKS:** the description of the activities to be implemented by the Contractor, including equipment to be delivered and installed by the Contractor under the Contract.

1.11 **PRODUCT:** the equipment which the Contractor has included in his Works as part of this Contract.

1.12 The **Project Manager** is the person named in the Special Conditions of the Contract (SCC) (or any other competent person appointed by the Purchaser and notified to the Contractor, to act in replacement of the Project Manager) who is responsible for supervising the execution of the Works.

1.13 The **Contract Administrator** is the Person named in the Special Conditions of the Contract (SCC) or any other person present at the office administering the Contract.

Article 2 Application

2.1 Amendments or additions to the Contract or changes from certain Contract Conditions are binding only if they have been explicitly agreed in writing between the Parties.

2.2 In the event of inconsistency between this text of these Contract Conditions and translations of them, this text always prevails.

PERFORMANCE OF THE CONTRACT

Article 3 Delivery

3.1 Unless agreed otherwise in writing, Delivery of the Works, specified by the Purchaser in the Technical Specifications and Scope of Works, and quoted for by the Contractor will take place on the agreed delivery date(s) or within the agreed delivery period(s) at the delivery location specified by the Purchaser, and the Contractor will bear all costs and risks connected with the delivery of the Works, including, where applicable, the import duties and responsibility for complying with the associated formalities.

3.2 The agreed delivery date(s) or period(s) are fixed and final. If the Works are not delivered at the agreed location within the agreed period, the Contractor will be in default without notice of default being required.

3.3 Delivery of the Works earlier than the agreed delivery date(s) or period(s) will take place only after prior written consent has been obtained from the Purchaser and will not alter the agreed payment date.

3.4 The Purchaser has the right to defer Delivery unless this would place a disproportionate burden on the Contractor. The Contractor is obliged to maintain the Works for the Purchaser at no additional cost until the deferred Delivery date, unless this would place a disproportionate burden on the Contractor, in which case the Parties will hold discussions to find a reasonable arrangement acceptable to both Parties. The provisions of articles 3.2, 3.4 and 14 apply to the Delivery deferred by the Purchaser, except that the Contractor will be in default, without prior notice of default, only after the deferred delivery date(s) or period(s) have been exceeded.

Article 4 Guarantee

4.1 The Contractor guarantees that the delivered Works complies with the Specifications and Performance Requirements the Contractor has been bidding against and which have been accepted by the Purchaser by issuing this Contract, is free of defects and is suitable for the purpose for which the Works are intended. The Works does not comply with the Contract if the Product does not have the characteristics the Purchaser might expect based on the Contract.

4.2 If the Purchaser has not provided a more detailed description of the requirements to be delivered by the Contractor, the Works should in any event be of good quality and meet at least the Construction and Building standards as applicable on the Solomon Islands, customary requirements concerning soundness, fitness for purpose and workmanship, and all requirements and customary industry regulations concerning quality, safety, health and the environment.

4.3 The Purchaser may no longer refer to the fact that the Works does not comply with the Contract if it has not notified the Contractor accordingly in writing within 60 days of discovering this fact. If the Contractor receives such a notification from the Purchaser, the Contractor will rectify the defect or non-conformity within a period set by the Purchaser in accordance with the provisions of article 13.

4.4 The Contractor guarantees that the delivered Works is free of any special encumbrance or restriction that the Purchaser has not accepted explicitly and in writing. The Contractor indemnifies the Purchaser against all claims in this regard.

4.5 The Purchaser may demand that, as security for compliance with, inter alia, the Contractor's Defects Liability Period obligations under this Contract, a guarantee may be required in a form of a Bankers Guarantee through a bank accepted by the Purchaser.

4.6 The Purchaser may demand that, as security for the completion of the Contract, and the Contractor's performance obligations under this Contract, a Performance Guarantee in the form of a Bankers Guarantee through a bank accepted by the Purchaser.

4.7 The Contractor guarantees the delivery of spare-parts for the equipment delivered under the performance of his contract for the duration of the technical or economical lifespan of the equipment quoted. Special requirements regarding the provision and availability of spare-parts may be requested at time of tendering.

Article 5 Inspection

5.1 At the Purchaser's request, the Works may be regularly inspected by the Purchaser, or a third party designated by the Purchaser during the execution of the Contract. However, the Purchaser is not obliged to carry out such an Inspection.

5.2 If the Purchaser wishes to inspect the Works:

a. the Contractor will allow the Purchaser, or a third party appointed by the Purchaser full access to the location where the Contractor is executing the Contract.

b. the Contractor will, upon request and at no cost to the Purchaser, cooperate with the Inspection and facilitate the Purchaser or a third party appointed by the Purchaser at the location and reasonable assistance in terms of staff and materials.

c. the Inspection, if the Contractor so desires, will take place in its presence or in the presence of an expert designated by the Contractor. The associated costs will be borne by the Contractor.

5.3 If the Purchaser rejects the Works to be delivered, the Contractor is obliged, without prejudice to all other rights or claims of the Purchaser, to rectify without delay, at its

own expense and risk, the defects and notify the Purchaser when the Works are ready for a new Inspection. The provisions of article 5 apply in full. Rejection by the Purchaser during the first or previous Inspection will not lead to the agreed delivery period being extended.

5.4 The approval of the Works by or on behalf of the Purchaser does not include any approval that the Works complies with the guarantees given in accordance with article 4.

RELATIONS BETWEEN THE PARTIES

Article 6 Contacts

6.1 Each Party will appoint a contact person to maintain contacts in relation to the performance of the Contract. The Parties will notify each other in writing of the person they have appointed as their contact.

6.2 The contacts may represent and bind their Parties, unless the Contract provides otherwise.

Article 7 Method of Notification

7.1 All notifications given by the Parties on the basis of the Contract must be in writing.

7.2 Oral communications, undertakings or agreements have no legal force unless confirmed in writing.

7.3 'In writing' is understood to include 'electronically', provided:
   a. the notification can be consulted by the addressee.
   b. the authenticity of the notification is sufficiently guaranteed; and
   c. the identity of the sender can be determined with sufficient certainty.

Article 8 Confidentiality

8.1 The Contractor will not disclose in any way any information that is provided by the Purchaser or that is made known to it or comes to its knowledge, which it knows or may reasonably suspect to be confidential, except in so far as it is compelled to disclose such information under a court ruling.

8.2 The Contractor will pass-on the duty of confidentiality referred to in this article on all staff or sub-contractors it engages in the performance of the Contract and will ensure that this duty is observed.

8.3 The Contractor will not issue press releases or make other public statements about the Contract except with the prior consent of the Purchaser.

8.4 If the Contractor breaches its duty of confidentiality, the Purchaser may impose a penalty, as laid down in the Special Conditions of Contract. Payment of the penalty,

which is payable forthwith, does not discharge the Contractor from its liability for indemnifying any loss caused by the breach.

FINANCIAL PROVISIONS

Article 9 Prices

9.1 Unless agreed otherwise in writing, the price(s) agreed for the Works include the costs of transport, taxes, and import duties, other levies, insurance, packaging costs, incidental services, disposal costs and any assembly or installation costs.

9.2 The prices for the Works are fixed, unless the Contract specifies the circumstances that may lead to a price adjustment and the way such an adjustment should be made.

Article 10 Invoicing and payment

10.1 The Contractor will invoice the Purchaser for the delivered Works at the agreed milestones and at the agreed prices in accordance with the Price Schedule. The Contractor will send the invoice to the address specified by the Purchaser, stating the date and number of the Contract and other details requested by the Purchaser.

10.2 The Contractor will send the invoice in hard copy so that it can be received and processed in accordance with the specifications issued by the Purchaser.

10.3 The right to payment arises upon Delivery of agreed milestones or after Delivery of the Works, unless the Contract provides otherwise. The Purchaser will pay the price for the delivered Works within 30 days of receiving the invoice if it satisfies the provisions of the Contract. The Purchaser has the right to offset invoice amounts owed against amounts that the Contractor owes the Purchaser.

10.4 The Purchaser may withdraw retention payment from the Contractors milestone payments. The total sum of the accumulated retention payment shall be released after satisfactory performance after the Defects Liability Period and upon verification by the Client.

10.5 Payment of an invoice by the Purchaser does not recognize that the Product is in conformity with the guarantees given in accordance with Article 4.

10.6 In case payment is subject to SIG tax law, all taxes applicable will be deducted from the invoice before payment.

Article 11 Advance

11.1 If it has been agreed that, for the purpose of performing the Contract, the Purchaser should make an Advance Payment prior to the start of the Works, the Contractor will issue the Purchaser with an Advance Payment bank guarantee in advance of making the

payment to the Contractor. This Advance Payment bank guarantee issued by the Contractor will cover the value of the Advance Payment. The Purchaser is not required to pay any of the cost of the guarantee.

11.2 The '*Advance Payment Guarantee*" will be issued by a bank approved by the Purchaser, in accordance with the model attached to the Standard Bidding Documents.

11.3 The Purchaser may allow the Contractor to claim Milestone payments and allow an offset of the Advance Payment to the milestone payments.

NON-PERFORMANCE AND DISSOLUTION

12. Penalty

12.1 If the Works have not been delivered within the time limit agreed, the Contractor will owe the Purchaser an immediately payable penalty of 0.1% of the price of the Contract for every day the failure persists, subject to a maximum of 10% of that price. If Delivery has become permanently impossible for reasons other than force majeure, the Contractor will immediately be liable for the full penalty of 10% of the price of the Product in question.

12.2 The penalty is payable to the Purchaser without prejudice to all its other rights or claims, including:

a. its right to demand that the Contractor fulfil its agreed obligation to deliver the Works (in so far as this has not become permanently impossible);
b. its right to compensation.

12.3 The penalty will be set off against the amounts owed by the Purchaser, irrespective of whether the rights to such amounts have been assigned to a third party.

Article 13 Non-performance

13.1 If the delivered Works or the equipment incorporated into the Works does not comply with the guarantees referred to in article 4, the Purchaser may demand that the Contractor repair or correct the Works. The associated costs will be borne by the Contractor.

13.2 If, after receiving a written demand from the Purchaser, the Contractor fails to comply, within the period stipulated therein, with a requirement as referred to in paragraph (13.1), the Purchaser has the right, without prior recourse to the Courts, to choose between:

a. replacement of the Contractor or replacement/repair of the Equipment incorporated into the Works by a third party at the Contractor's expense;
b. replacement of the Contractor or return of the Equipment incorporated into the Works at the Contractor's expense and risk and dissolution of the

Contract in accordance with the provisions of article 16 and, in consequence, crediting of however much of the purchase price has already been paid for the Works in question.

13.3 The provisions of paragraphs (13.1) and (13.2) do not affect other rights and claims that the Purchaser may derive from non-performance.

Article 14 Liability

14.1 A Party who fails to meet its obligations is liable to the other Party for any loss incurred by the other Party.

14.2 The Contractor indemnifies the Purchaser against any third-party claims for damages resulting from a failure as referred to in paragraph 1.

Article 15 Force Majeure

15.1 In the event of temporary force majeure, the Contractor will immediately notify the Purchaser in writing after the circumstances bringing about force majeure have occurred, stating the cause of the force majeure. The Purchaser then has the right to choose between:

a. Allowing the Contractor to defer compliance with its obligations under the Contract for a reasonable period of up to four weeks. If the Contractor is still unable to fulfil its obligations under the Contract when this time limit expires, the Purchaser has the right to dissolve the Contract with immediate effect, without being obliged to pay compensation or any costs to the Contractor.

or

b. Dissolution of the Contract with immediate effect, without being obliged to pay compensation or any costs to the Contractor.

15.2 In the event of long-term force majeure on the part of the Contractor, the Contractor will immediately notify the Purchaser and the Purchaser has the right to dissolve the Contract with immediate effect out of court, without being obliged to pay compensation or any costs to the Contractor.

15.3 The term 'force majeure' is in any event understood not to include: staff shortages, strikes, staff illness, shortages of raw materials, transport problems, breach of obligations by Contractors, failures in the Contractor's production process and liquidity or solvency problems on the part of the Contractor, or failures on the part of third parties engaged by the Contractor.

Article 16 Dissolution

16.1 Without prejudice to the other provisions of the Contract, either Party may dissolve the Contract in full or in part out of court by registered mail, without being obliged to pay any compensation to the other Party, if the other Party is in default or compliance is temporarily or permanently impossible.

16.2 In the event of force majeure, the Purchaser has the right to dissolve the Contract in accordance with the provisions of article 15.

16.3 The Purchaser may dissolve the Contract with immediate effect out of court by registered mail, without being required to send any demand or notice of default, and without being obliged to pay the Contractor any compensation, if the Contractor applies for or is granted a provisional or definitive suspension of payments, files for bankruptcy, is declared bankrupt, if its business is wound up, if it ceases trading, if a substantial proportion of its assets are seized, if it is deemed on any other grounds to be no longer capable of fulfilling its obligations under the Contract, if bribery or conflicts of interest as referred to in article 21 occur, or if the Contractor undergoes a merger or division.

16.4 If the Contract is dissolved, the Contractor will repay the undue amounts already paid to it by the Purchaser. If the Contract is partially dissolved, the Contractor is obliged to repay only the payments relating to the dissolved part.

Article 17 Retention of right to demand compliance

17.1 If one of the Parties fails to demand compliance with any provision within a time limit set by the Contract, this will not affect its right to demand compliance at a later date, unless the Party in question has expressly accepted the non-compliance in writing.

MISCELLANEOUS

Article 18 Documentation

18.1 The Contractor will provide the Purchaser with clear, adequate "*as build*" drawings of the Works as finally implemented and full documentation, drawn up in English or another agreed language, on the characteristics and functionalities of the Equipment included into the Works.

18.2 The Purchaser has the right to publish and reproduce the Documentation solely for the users envisaged by the Contract.

18.3 The Contractor indemnifies the Purchaser against claims that third parties might enforce on the ground of a copyright accruing to them in relation to the Documentation.

Article 19 Assignment of rights and obligations under the Contract

19.1 Neither Party is entitled to transfer rights and obligations arising from the Contract to third parties without the written consent of the other Party. The other Party will not withhold its consent without reasonable grounds. It may attach conditions to its consent.

19.2 Paragraph (19.1) does not apply to the establishment of limited rights, such as the right of pledge.

Article 20 Insurance

20.1 The Contractor has taken out and will retain adequate insurance cover for business related liability, including 3rd party liability, Workmen's Compensation, as identified in the Special Conditions of Contract.

20.2 At the Purchaser's request, the Contractor will immediately present either the original or a certified copy of the policies and proof of the payment of premium for the insurance referred to in paragraph 1, or a statement from the insurer to the effect that the insurance exists. The Contractor will not terminate or alter the insurance contract without the Purchaser's prior written consent. The Contractor has no right to change the insured sum to the Purchaser's disadvantage without the Purchaser's prior written consent. The insurance premiums owed by the Contractor are deemed to be included in the agreed prices.

20.3 The Contractor assigns to the Purchaser in advance all rights to the payment of insurance proceeds as referred to in paragraph 20.1, in so far as such proceeds relate to damage for which the Contractor is liable to the Purchaser under the Contract. The Contractor is obliged to notify its insurance company in writing of this assignment and to send a copy of this written notice to the Purchaser, without prejudice to the Purchaser's right to notify the insurer itself. Any insurance proceeds paid directly by the insurer to the Purchaser will be deducted from the amount of compensation the Contractor is required to pay to the Purchaser in respect of the insured event.

Article 21 Bribery and conflicts of interest

21.1 The Parties will not offer to each other or to third parties, or ask for, accept or obtain a promise of, from each other or third parties, whether for themselves or for any other Party, any gift, reward, compensation or benefit of any form whatsoever if this could be construed as constituting an illicit practice. Such a practice may constitute grounds for dissolving the Contract either in full or in part.

21.2 If it transpires that one of the Purchaser's subordinates was in the Contractor's employment, regardless of whether or not such employment was paid, during the formation of the Contract, and that the Purchaser was not informed of this prior to the signing of the Contract, the Purchaser may dissolve the Contract with immediate effect out of court, without being required to give any notice of default or to pay any compensation.

Article 22 Invalidity

If one or more provisions of these General Contract Conditions or the Contract are found to be invalid or are nullified by a court, the remaining provisions will retain their legal force. The Parties will consult on the former provisions in order to make alternative arrangements. The alternative arrangements must not undermine the purport of these General Conditions for the Execution of Works or the Contract.

Article 23 Follow-up order

The Contract does not entitle the Contractor to any follow-up orders.

Article 24 Long-term obligations

Provisions which by their nature are intended to persist after the Contract has been performed will remain in force after the expiry of the Contract. They include the provisions on: guarantee (article 4), confidentiality (article 8), non-performance (article 13), liability (article 14), termination (article 16.4), documentation (article 18), assignment of insurance proceeds (article 20.3), and disputes and applicable law (article 25).

Article 25 Disputes and applicable law

25.1 Any dispute between the Parties in relation to the Contract will only be submitted to the competent Court of the Solomon Islands, unless the Parties agree an alternative means of dispute resolution.

25.2 The Contract is governed by the law of the Solomon Islands.

Article 26 Final provisions

26.1 Any changes from this Contract are binding only if they have been expressly agreed by the Parties in writing.

26.2 Any written or oral agreements previously made by the Parties about the order(s) placed under this Contract for the Delivery of the Product will be nullified by the signature of the Contract.

SECTION III: SPECIAL CONDITIONS OF CONTRACT

The following Special Conditions of Contract shall supplement the General Conditions of Contract for the Execution of Works for the Solomon Islands Government. Whenever there is a conflict, the provisions herein shall prevail over those in General Conditions for the Execution of Works (GCC). The corresponding Article numbers in the General Conditions of Contract are indicated below.

GCC Article	No.	Particulars
1. Definitions	1.5	**a. THE PURCHASER IS:** National Hosting Authority Solomon Islands Government P.O. Box 2443 Honiara, Solomon Islands **b. THE CONTRACTOR:** SSS Construction Limited P.O. Box 138 Honiara Solomon Islands Email: Jason 0503@yahoo.com Mob: 7686922 **c. THE LOCATION SITE IS:** Main stadium to SINIS way highway Drainage
	1.12, 1.13	◦ **THE PURCHASER'S PROJECT MANAGER IS:** Ramsey Ofainu Project Management Unit National Hosting Authority Email: ROfainu@sol2023.com.sb
		◦ **THE CONTRACT ADMINISTRATOR IS.** Soleana Gagahe Contracts Manager Project Management Unit National Hosting Authority Email: SGagahe@sol2023.com.sb

		• **CONTRACTOR'S PROJECT MANAGER** Neil Buendia Project Manager SSS Construction Ltd P.O. Box 138 Honiara Solomon Islands Email: sss@business.com.sb
3. Delivery of the Works	3.1	The works shall be completed within 6 weeks from the Contract Commencement date. **Note:** *For this Contract, a six-day working week is assumed. Therefore, the works shall be completed within weeks of commencement of the Contract. The Contract commences on the day that it has been signed and countersigned by all parties to the Contract.*
4. Guarantee	4.5	The Defects Liability Period shall be 2 months, for quality of workmanship, from the date of acceptance of the Works. The Contractor shall, in addition, comply with the performance as specified in the Contract. If for reasons attributable to the Contractor these guarantees are not attained in whole or in part, the Contractor shall, at its discretion, either: a) make such changes, modification, and/or additions to the Works or any part thereof as may be necessary in order to attain the contractual guarantees specified in the contract at its own cost and expense
	4.6	This Contract must be supported by a duly signed Performance Securing Declaration, acceptable to the Purchaser, in lieu of a Performance Security. The Performance Securing Declaration is at Appendix ___ of the Contract.
5. Inspection	5.1	Inspection and tests by the Purchaser or 3rd party in name of the Purchaser regarding the Execution of the Works and the quality levels applied to may be implemented as follows: • The time limit for inspection and quality assurance may be always undertaken during the Execution of the Works. There is no need for the Purchaser or their representative to announce their inspection beforehand.
6. Contacts	6.1	**THE PURCHASER'S AUTHORIZED REPRESENTATIVE FOR THIS CONTRACT IS.** Leeroy Bird Executive Director Project Management Unit Email: LBird@sol2023.com.sb

		THE CONTRACTOR'S AUTHORIZED REPRESENTATIVE IS: Bassanio Lee Managing Director SSS Construction Limited P.O. Box 138 Honiara-Solomon Islands Email: Jason_0503@yahoo.com
9. Prices	9.1	The Contract price is fixed for the duration of the Contract.
	9.2	Variations of the Contract price may be granted by the employer provided the request for variation is made prior to the work being undertaken, and the variation is assessed by the Employer to be necessary, and the price quoted is reasonable.
10. Payment	10.1	a) Payment for Works carried out under this contract shall be made in SBD. The Contractor is to submit a claim for works completed. The Project Manager is to inspect the works and if in grievance with the Contractor authorise payment of the claim. b) If there is a difference between the assessed works complete and the claim amount the Contractor is to adjust the claim to match the value of the completed works. c) Payment for milestone completion shall conform to the payment schedule as in section III of the Contract.
	10.6	In case payment is subject to SIG tax law, the latest information on the relevant withholding taxes and other payables are to be found at the website of the Inland Revenue Department: http://www.ird.gov.sb
11. Advance Payment	11.1	The first scheduled payment shall be the Mobilization Payment which shall be paid after the project has mobilized, materials have been delivered to site and work is ready to commence.
12. Penalty (Liquidated Damages)	12.1	Applicable rate for the Liquidated damages is: 0.1% per day.
14. Contractor's Liability	14.1	Notwithstanding Article 14.1 of the GCC, the Contractor's liability is twice the Contract value as stated in the Contract between Purchaser and Contractor.
20. Insurances	20.1	Contractor shall provide with their tender to following proof of insurance: - Workmen's Compensation — As required by SI Law - Third Party Liability — SBD 2,000,000 - Equipment for use in Project — Replacement Value

SECTION IV: PAYMENT SCHEDULE

This payment schedule is part of the Contract and is crucial part of which contractor shall be remunerated. This schedule is referred to the Contractor's milestones and claims. If there are any inconsistencies of milestones claims from the Contractor, these milestones and Payment Schedule stated herein supersedes such Contractor's claims

CONTRACT VALUE			SBD$2,306,520.00
PAYMENT NUMBER	MILESTONE DESCRIPTION	AMOUNT CLAIMED	AMOUNT DUE PAYABLE
Payment No. 1	Mobilization (50%) Payment shall be made upon contractor's mobilization to site, site clearance and commencement of works.	$1,153,260.00	$1,153,260.00
Payment No.2	30% payment shall be made upon 50% completion of all works as required	$691,956.00	$691,956.00
Payment No.3	15% shall be paid upon overall completion of all works required as final works, inspection and testing, site cleanup and demobilization from site, and Client has delivered the Certificate of Practical Completion.	$345,978.00	$345,978.00
Payment No. 4	5% Retention payment shall be made two months after completion and acceptance of retention rectification certifications.	$115,326.00	$115,326.00
TOTAL			$2,306,520.00

SECTION V: CONTRACTORS PRICED BILLS OF QUANTITIES

SECTION V: SCOPE OF WORKS/ SPECIFICATIONS

SECTION VI: SPECIFICATIONS & GENERAL REQUIREMENTS

1. Preliminary & General

The Contractor will be responsible for the following:

- Provision of all material and labor on site.
- High quality of workmanship and finishes by appropriately qualified personnel.
- Maintenance of site access and site storage.
- Provision of all temporary site service including, but not limited to; water, electricity, site sanitation etc.
- Protection of all works.
- Provision of site office and site storage to suit the Contractor's personnel needs.
- Connection of all permanent services to the works.
- Site cleanliness and tidiness for maintenance of safety and environment.

2. Health and Safety

The Contractor is to ensure safety of all personnel and the public whilst on site. It is mandatory for the Contractor to submit a Work Safe Method Statement before commencing any works on site. The Work Safe Method Statement is to be reviewed and approved by the Employer. To a minimum the following criteria must be met;

3. General safety requirements

The contractor must put controls in place to eliminate, isolate or minimize all hazards. General hazards include;

- General public
- Heavy plant (trucks reversing, excavators)
- Deep excavations
- Falling objects
- Hot works
- Working at height

4. Personal Protective Equipment (PPE)

Contractors personnel or any visitor on site must comply, at a minimum, with the following;

Safety boots/ Footwear	Steel cap boots to be worn at all times
High Visibility (HV) Clothing	HV jacket or vest to be worn at all times.
Head Protection	Hard hat to be worn when working under falling hazards (cranes, scaffolding, double storey structure
Hearing Protection	Hearing protection is to be used when operating or in the vicinity of noisy equipment.

5. Specific Safety Requirements

The contractor must, to a minimum, comply with the following:

Equipment	The Contractor is to nominate the equipment to be used on site. A detailed equipment list is to be submitted as part of the Contractors tender submission. All equipment is to be in safe and working order and must all have current licenses where appropriate. Vehicles are to be operated by qualified or adequately trained personnel.
Ladders	Must be available on site and in good condition and fit for industrial use.
Scaffold	Must be in good condition and adequately assembled by trained personnel.
Power Tools	Tools on site must be serviced, in good condition and adequate for the task/job carried out.
Electricity	Any works that involve the use of electricity, including temporary power during works, is to be carried out be a suitably trained and certified electrician.
Fencing	Contractor is to separate construction area from general public areas using fencing or barrier tape. The site should be a distinct isolated work area. All hazards such as open excavation also need to be clearly marked or fenced.
Signage	Contractor to erect appropriate warning signage at work site. A project signboard is to be installed at the site entry at the commencement of works. Project sign board needs to be approved by Employer's representative prior to erection.
Storage	Materials are to be stored in an appropriate and safe manner; and in accordance with any relevant material safety data sheet (MSDS).
Waste	All waste is to be collected and moved to a location identified and approved by Employer's representative as a waste disposal area.
Ablution	The Contractor should provide adequate ablutions for all personnel or visitors on site. Ablutions must be cleaned on a regular basis to maintain adequate hygiene standards.
Access	Site must have a designated entry and exit point. The entry and exit point should be clearly signed and located to provide minimal disruption to the public.
Authorised Personnel	Only authorised personnel allowed on site – appropriate signage must be in place to communicate this.

Evacuation Plan	An emergency evacuation and management plan must be in place and made known to all on site.
Fire fighting	Fire extinguishers must always be available on site and positioned in areas for ease of access in emergency.
First Aid	A first aid kit must always be available on site. The Contractor is to ensure that at least two of the Contractor's personnel on site at any time are adequately trained and certified in First Aid.
Emergency Response	Emergency response (Police, Ambulance, Fire Brigade) numbers must be available and displayed on site in event of an emergency.
Drug & Alcohol	No smoking, alcohol consumption or chewing of betel nut is permitted by the Contractor or staff. No illicit drug of any type are to be present or in use on site.
Child Protection	Children are not allowed on site at any time and no worker is ever to accompany a child on site without the expressed approval of the Employer's representative

6. Quality

The Contractor is to ensure a Quality Management System (QMS) is maintained throughout the duration of the Works. To a minimum the QMS must ensure the following is maintained.

- Quality Management Plan.
- Quality Management records (testing records, compliance certificates).
- Internal quality audits.
- Non conformance and corrective actions list.

The Contractor must present the QMS and Quality management plan to the Employer's representative for approval before the Works can commence.

7. Environment

Environmental measures for the project are to include:

- All waste is to be removed from site and disposed of as per Local Authority requirements.
- No waste is to be burnt on site.
- Protective measures must in place to ensure that no run off from the site goes into nearby waterways.
- Any spill of chemicals, diesels or hazardous materials are cleaned up immediately. All hazardous materials are stored in a safe place and in a way that spillage will not harm the environment.

8. Project Administration

Authorised Representative	The Contractor must nominate an authorized representative for all external communications. The authorized representative must be suitably qualified and fluent in the language of English. All communications between parties should be in English.
Pre – Start Meeting	A prestart meeting will be held at the site prior to the commencement of the Works. The objective of the prestart meeting is to confirm the project outcomes, responsibilities and relationships for the project. Attendees at the meeting are to include representatives of the Contractor, Employer and relevant authorities.
Project Meetings	Project Meetings should be held on a fortnightly basis during the contracted period of Works. Attendees should include representatives of the Contractor and Employer. Project meetings may also be held as required at the request of the Employer or the Contractor.
Project Reporting	The Contractor is to submit weekly and monthly project reports and summaries. These reports should detail to a minimum: • Project progress and timeline update • Key issues and blockages • Pending approvals • Safety summary • Quality summary • Equipment summary • Staff records • Photographic records • Project Finance update
Payment Claims	Payment Claims are to be presented to the Employer's Representative /Project Manager whenever work associated with a milestone payment has been completed. Proof of completion of the milestone in the form of a monthly site report showing the completed work and a statement from the Contractor must accompany the Payment Claim. Payment Claims will be reviewed by the Employer's representative/Project Manager for approval. Once approval has been provided the Contractor can submit an invoice for payment.
Work Hours	Work hours are generally to be 8.00am to 5.00pm Monday to Friday. Extended work hours can be requested by the Contractor and approval provided by the Employer's representative.

9. Earthworks

Earthworks is to include, but not limited to, all clearing and grubbing, excavation, trenching, shoring, backfilling, removal of spoil material and placement of fill material. All excavation is to be conducted in a safe manner using nominated equipment. All equipment used in excavation is to be nominated in the Contractor's Safe Work Method Statement.
All excavation related activities on site are to be compliant with design documentation and approved by the Employer's representatives.

10. Clearing and Grubbing

Clearing and grubbing operations shall be carried out in the following areas as relevant:

- Areas where general earthworks are to be constructed, plus a margin of 3m or to property boundaries; whichever is the lesser.
- Areas specified for visibility.
- Other areas as indicated on the drawings.

Disposal of Cleared and Grubbed Materials:
Materials that comply with the requirements specified may be used in the Works, otherwise the material shall be removed from the Site or if approved, be disposed within the Site.

11. Excavation Dewatering

Allow to drain all foundation excavations to special low-level sumps, located away from the permanent works. Excavation shall remain dry for duration of the work, and prior to placing of hard fill or site concrete. Prevent all water flow over freshly laid work.

12. Backfilling

Bring all filling on to the site unless it can be provided from soil recovered from the site. Filling shall be sound material, free of perishable material or any material that will not form stable fill. The fill shall be the best of the clean inorganic excavated material, fully stabilised as approved by the site supervisor.

13. Consolidation

Backfill around all foundations with approved backfill material and compact by approved mechanical means. Place in layers of 150mm loose depth to levels shown on the foundation drawings. Consolidate each layer to at least 100% standard of the maximum dry density available at standard effort before proceeding to next layer. Materials are to be spread so as not to disturb subgrade and shall be placed in uniform layers with each layer interlocking the layer below. Placing procedures shall ensure minimum segregation.

14. Backfilling for Specific Structures

Under floor slabs on fill provide 150mm minimum thickness of approved crushed coral fill, blinded with a 50mm layer of sand or similar approved fine material so as to produce a surface which will not damage the damp proof membrane overlay. Hard fill shall be placed in layers not exceeding 100mm loose depth and shall be smooth wheeled roller (5 tonne), or vibrating roller with equivalent Compactive effort to 100% standard of the maximum dry density. It will be noted that concrete floors will be supported off this filling.

15. Top Soil

Where possible stockpile topsoil for re-spreading for future landscape works as necessary.

16. DEFINITIONS

16.1 Rock: Any natural or artificial material encountered in the excavation which cannot be removed until broken up by explosives or mechanical means such as, jackhammer or percussion drills.

16.2 Other than Rock: All other material encountered in excavation.

17. Rubbish

Rubbish or debris is not to be buried on site. Remove all rubbish from the site.

18. Service trenches

18.1 Excavation

If practicable, make trenches straight between manholes, inspection points and junctions, with vertical sides and uniform grades.

18.2 Trench widths

Keep trench widths to the minimum consistent with the laying and bedding of the relevant service and construction of manholes and pits.

18.3 Backfilling

a. **General:** Backfill service trenches as soon as possible after laying the service. Place backfills in layers. Compact each layer to a density sufficient to minimise settlement.
b. **Backfill material:** Excavated spoil or well graded inorganic material with maximum particle size of 75 mm.
c. **Next to services:** Do not place any particles greater in size than 25 mm within 150 mm of services.
d. **Under-paved areas:** Coarse sand, controlled low strength material or fine crushed rock.

19. Shoring

The Contractor/local builder shall shore up as necessary and batter the faces of excavations. The stability of soil faces during excavation work will be entirely the responsibility of the Contractor who shall make good any damage which may occur as the result of soil failure.

Where excavations at different levels are adjacent, the sides of the lower excavations shall be supported in such a manner that the bearing capacity of the retained soil is not impaired.

SECTION VII: SITE SETOUT & DRAWINGS

Shown below are the design drawings for the concrete-lined drainage system that shall be constructed by the Contractor as per the Scope of Works in Section V: Scope of Works/Specifications of the Contract.

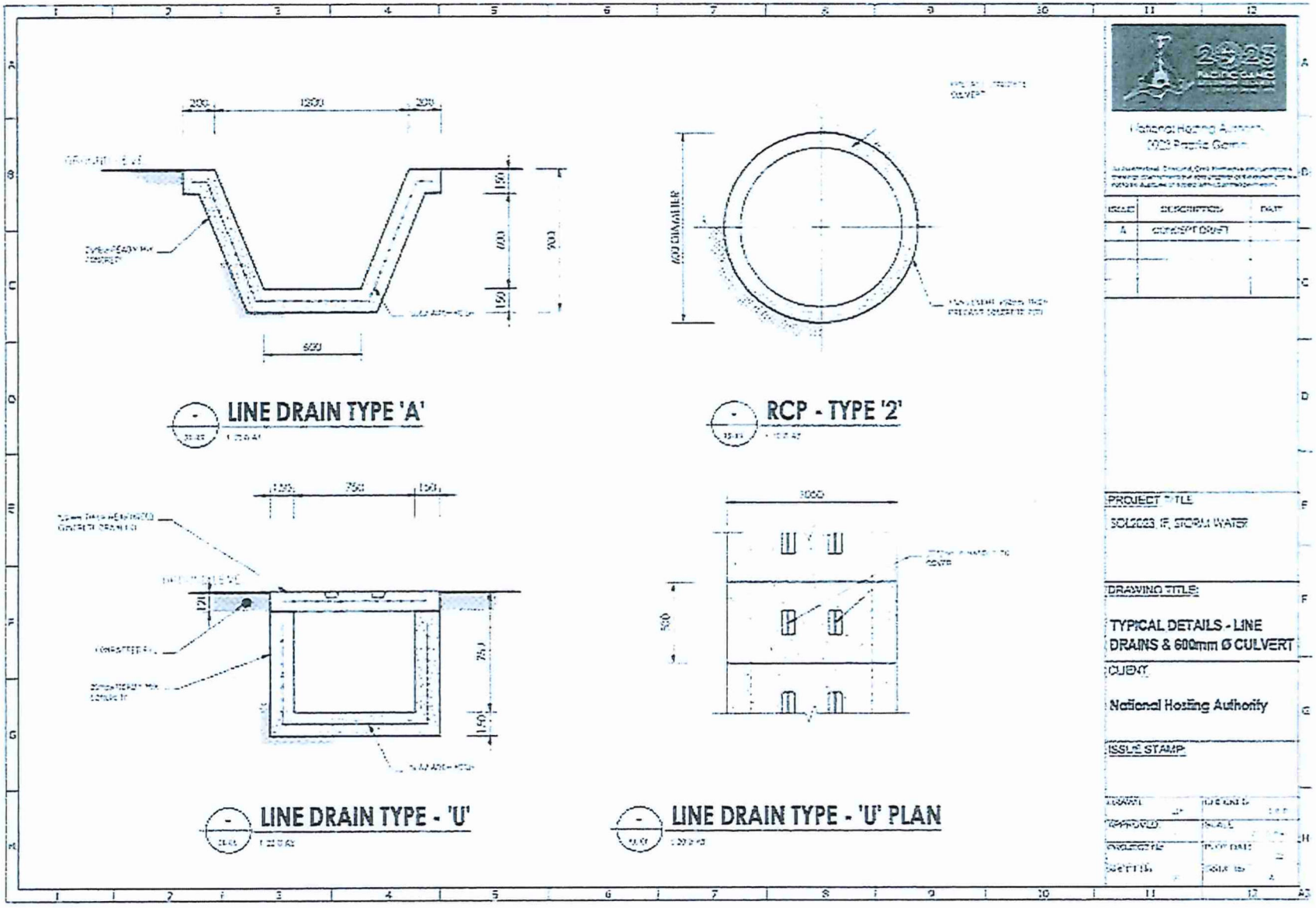
LINE DRAIN TYPE 'A'
RCP - TYPE '2'
LINE DRAIN TYPE - 'U'
LINE DRAIN TYPE - 'U' PLAN
PROJECT TITLE
SOL2023 IF STORM WATER
DRAWING TITLE:
TYPICAL DETAILS - LINE DRAINS & 600mm Ø CULVERT
CLIENT
National Hosting Authority
ISSUE STAMP

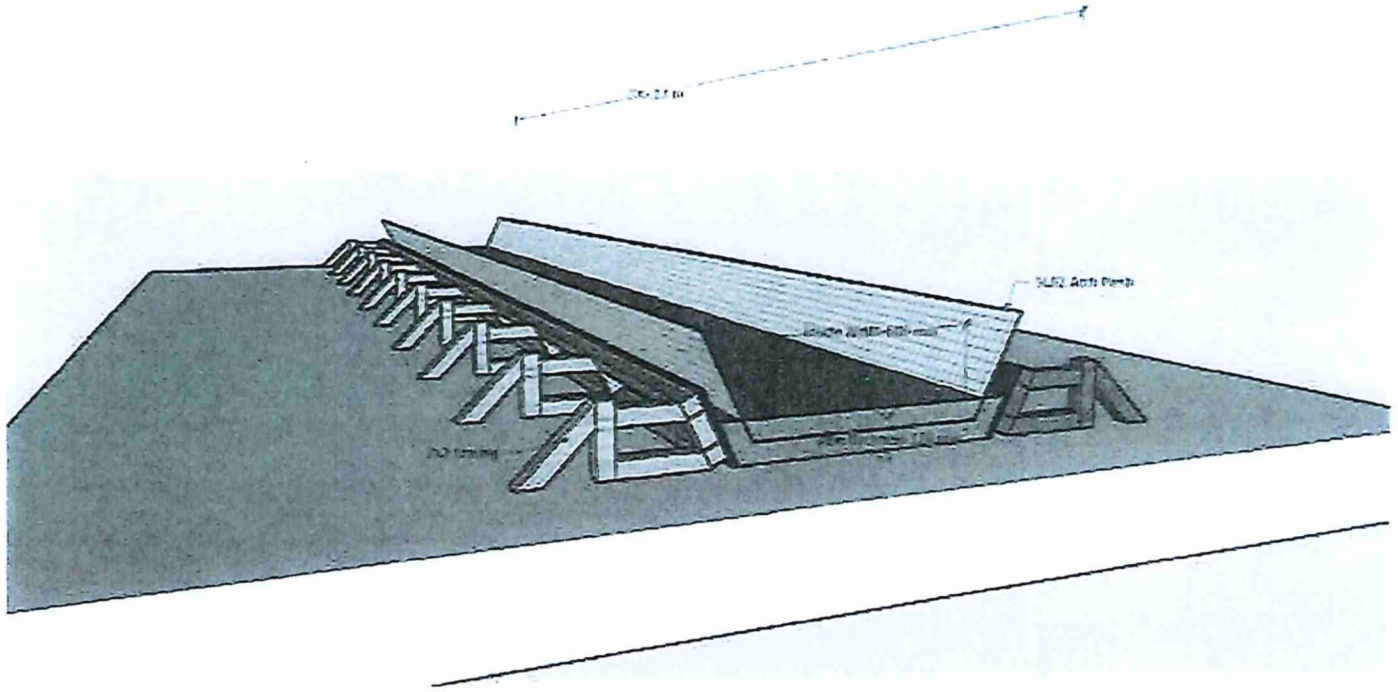

LINE DRAIN TYPE 'A'- BRACING SETUP FOR DRAIN BASE

2023 Pacific Games

PROJECT TITLE:

SOL 2023 GAMES

DRAWING TITLE:

BRACING VIEW FOR LINE DRAIN TYPE 'A'

CLIENT:

NATIONAL HOSTING AUTHORITY

ISSUE STAMP:

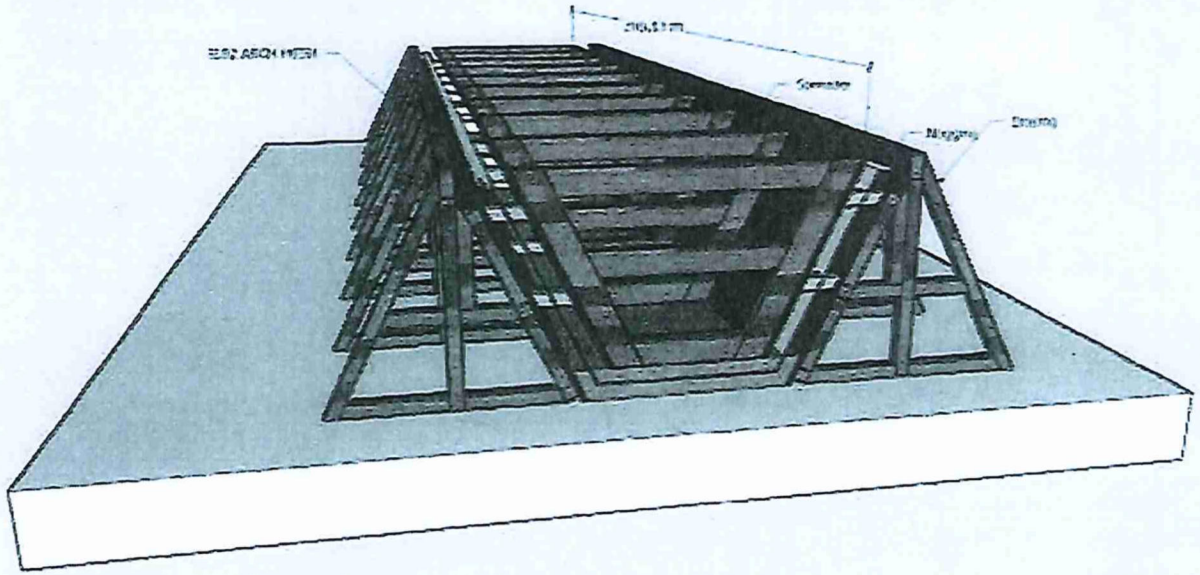

LINE DRAIN TYPE 'A'- BRACING SETUP FOR DRAIN SIDES

ISSUE	DESCRIPTION	DATE
A	CONCEPT DRAFT	

PROJECT TITLE:

SOL 2023 GAMES

DRAWING TITLE:

BRACING VIEW FOR LINE DRAIN TYPE 'A'

CLIENT:

NATIONAL HOSTING AUTHORITY

ISSUE STAMP:

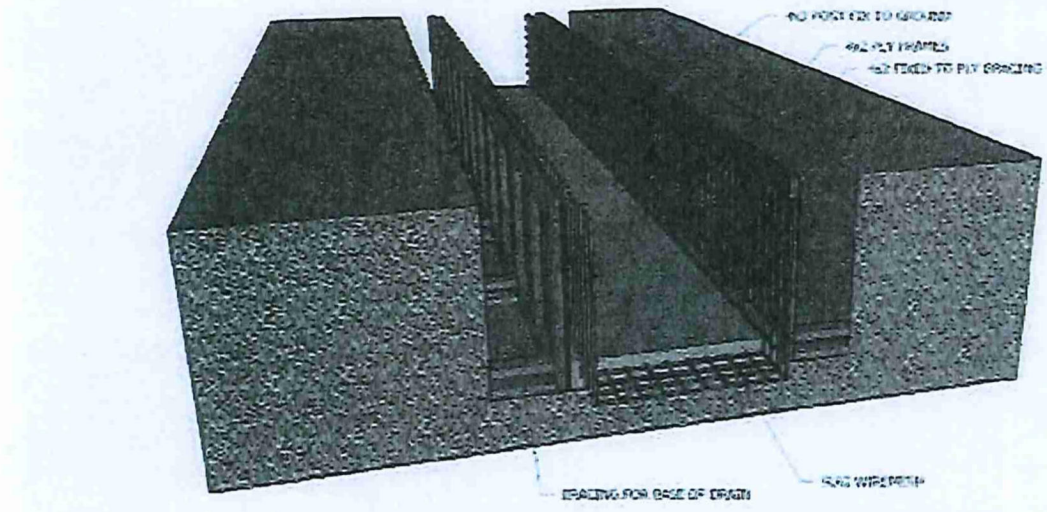

LINE DRAIN TYPE 'U'- BRACING SETUP FOR DRAIN BASE

National Hosting Authority
2023 Pacific Games

ISSUE | DESCRIPTION | DATE
A | CONCEPT DRAWING |

PROJECT TITLE:
SOL 2023 GAMES

DRAWING TITLE:
BRACING VIEW FOR LINE DRAIN TYPE 'U'

CLIENT:
NATIONAL HOSTING AUTHORITY

ISSUE STAMP:

DRAWN | DATE
APPROVED | SCALE

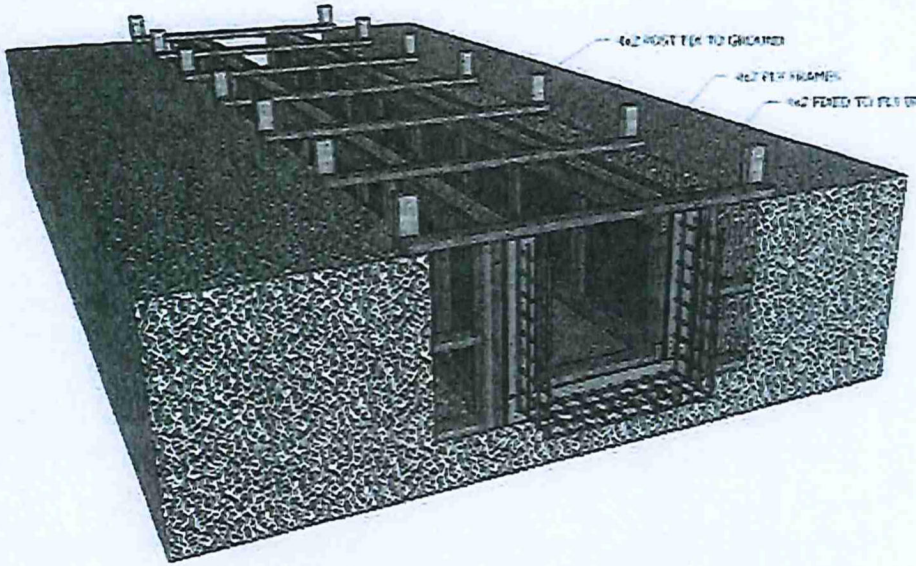

LINE DRAIN TYPE 'U'- BRACING SETUP FOR DRAIN SIDES

ISSUE	DESCRIPTION	DATE
A	CONCEPT DRAFT	

PROJECT TITLE:

SOL 2023 GAMES

DRAWING TITLE

BRACING VIEW FOR LINE DRAIN TYPE 'U'

CLIENT:

NATIONAL HOSTING AUTHORITY

ISSUE STAMP:

SECTION VIII: ANNEXES TO THE CONTRACT

ANNEX I: TENDER AWARD LETTER

ANNEX II: PERFORMANCE SECURING DECLARATIO

ANNEX III: CONTRACTOR'S INSURANCE CERTIFICATE

MEMORUNDUM

Ref/09/23 **Ref No issued 09-23**

To: Dr Jimmie Rodgers
NHA Chair/Secretary to the Prime Minister
NHA/OPMC

NHA CHAIR ..... date: 11/9/23

Thru: Christian Nieng:
Executive Director/Secretariat
Chairman-ITB
National Hosting Authority

..... 11/9/23 date:

EXECUTIVE DIRECTOR

Attention: Leeroy Bird
ED/PMU/ Secretary ITB/GTB
National Hosting Authority

Date: 11th September 2023

Dear Chair, NHA/SPM,

SUBJECT: REQUEST APPROVAL TO AWARD CONTRACTS TO SSS CONSTRUCTION LTD AND TTC COMPANY LTD FOR CONSTRUCTION STORM WATER DRAINAGES-PLOT 2 & PLOT 1 TO SINIS (LOT 1 & 2).

I refer to the above, approval is required to award the Contract to civil contractors mentioned in TEC and for the construction of storm water drainages along the main highway.

The compliance team after review of the submitted documents agreed that the request made by PMU is in compliant with the waiver process stipulated in the PCAM 2013 Chapter 2 (2.7) as well as approval by the NHA board with waiver of threshold instruction granted by MoFT as follows.

1. *Pursuant to the Decision of the NHA Board taken at its meeting on 23rd March 2023, authorizing the expenditure level that can be approved by the NHA Chair of up to $8 million dollars per procurement/tender.*

2. *The new threshold issued by the Minister of Finance in accordance with the Cabinet endorsed paper 2023.*

As per TEC submitted by PMU/NHA, the following contractors had been recommended for different works at the main highway storm water drainage systems as in lots below.

Lot No	Bidders name	Description of Lot	Recommended Bid amount
Lot 1	TTC Company	Construction of Line drainage at KGVI East Plot 2 façade	$ 2,855,149.37
Lot 2	SSS Construction Ltd	Construction of U-Drainage improvement from Main stadium to SINIS	$2,306,520.00

Attached are the following documents.

1. TEC Report
2. RFP -Request for Costing
3. Bid waiver form (signed by PMU ED)
4. Contractors priced bill of quantities.
5. Scope of works

Your Approval is hereby sought to allow the Project Management Unit to proceed with the project.

Sincerely

Peter Himane
Procurement Compliance Manager
National Hosting Authority

NATIONAL HOSTING AUTHORITY
Solomon Islands Government

Bid / Quotation Waiver

In some instances, it is recognised it may not be possible to observe the requirements of competitive quotations or tendering as is stipulated in the FIs, and in which case a **Bid Waiver Form** must be completed. This is prepared by the Division / Section making the purchase, and must be approved by the authority that would approve a purchase of that value (e.g. GTB for Bid Waivers on purchases over $500,000). The waiver will only be granted in circumstances where observing the normal requirements would result in detriment to the people or assets of the Solomon Islands, or where no benefit would be obtained by observing the requirements.

Example where are waiver would be granted include but would be limited to the below.

- In a declared emergency (e.g. SI at War, Emergency, Natural Disaster)
- There is a genuine market limitation on the number of suppliers.
- Equipment is specialized or technical in nature.

Description of Product / Service

Provision of Security service at main stadium

REASON FOR REQUEST (Please Tick)

Genuine Market Limitation	✓	**Natural Disaster**		**SI at War**	
Public Emergency	✓	**Technical or Specialized Equipment**		**Other**	✓

Please summarise the reason for the request (you may attach further support if necessary)

Since NHA had less than two months before ethe games, the works along the main road is crucial to ensure the drainage is concreted as in the design, Kitano had earlier mentioned that it will not responsible for the main high drainage connecting to the Main stadium and other sport facilities, thus, PMU requests waiver of the tender process to proceed with selective tender as required. The selective tender mentioned in the PCAM 2013.

Reputable Civil contractors were called to submit costings as in the TEC report attached with this w3aiver

Requested by: Division / Section	**Signed:** **Date:** 8/09/23
Project Management Unit (GFC)	**Leeroy Bird** **Post: Executive Director (PMU)**

Approved by: Accounting Officer	Signed: Date: 11/09/23
	Christian Nieng Executive Director National Hosting Authority
Endorsed by Board Representative	Signed:.....date: 11/9/23
	Dr Jimmie Rodgers Chair NHA/SPM Chairman Games Tender Board

C5

NATIONAL HOSTING AUTHORITY
SOLOMON ISLANDS GOVERNMENT

CONTRACT PAYMENT AND COMPLIANCE CHECKLIST
(For payment of contracts over $100,000)

This checklist is to be submitted along with contracts payments for works, goods and services

Required documents Prepared by Committee/Department	FI Ref	Committee	Procurement	Finance
Purchase Requisition (PR) for the entire value of the contract	**P7 35**	✓		✓
Draft Contract **(not yet signed by Supplier)**	**P7 10.1**	✓		
Tender Award by ITB/GTB	**P7 10.1**			✓
PR signed by requisition officer		✓		✓
Vendor Information Form (for new vendor)				
ICT Checklist attached (if for ICT equipment)				
Progress Report of works/Photos etc				
Completion report if goods/services and works have been completed		✓		
Other reports if any (goods and services)				
Payment certificate from Engineer matching amount in Requisition		✓		✓
Invoice from Contractor matching amount in requisition		✓		✓
Compliance checks required and done by Procurement				
Contract form approved and Signed by Chairman/EDs	**P7 27.2**			✓
PR has been signed by authorized person (and not approving payment to themselves)	**P7 44**			✓
Check amount on PR matches the signed contract				✓
Account code used is correct	**P7 38.5(e)**			✓
Name on PR matches signed contract	**P7 38.5(e)**			✓
Check price and rates are reasonable	**P7 43.2(b)**			✓
Data entry checks for PV and Cheque payments done by Finance Department				
Amount entered in AX matches Requisition				✓
Account code in AX matches Requisition				✓
Vendor name in AX matches Requisition				✓
Item code and Units entered (e.g. box, each) correctly				✓
Description has enough detail				✓
Check dates on future instalments entered correctly				
Budget OK				✓

Note: If any of the above is not able to be certified please include an explanation of why. This will speed up the compliance process.

Department Compliance performed by:

Signed: _____

Name and Position: Graham Mc. – PM NHM

Date: 11/01/24

Procurement section Compliance performed by:

Signed: _____

Name and Position: Jeff Mekab Co

Date: 11/01/2024

Finance Department Compliance performed by:

Signed: _____

Name and Position: ~~16/01/24~~ N. Vufar

Date: 16/01/24