2023 PACIFIC GAMES OFFICE

Approval /Signature Required

Supplier Name: Ropiko Enterprises Ltd – Payment 3 20% Burnscreek Access Road

Payment Approval

1) ~~Minute~~	☐	Sign by ED			
2) Requisition	☐	Compliance Officer		Sign by ED	
3) Payment Voucher	☑	Sign by FC		Sign by ED	✓ 15/1/24
4) LPO	☐	Sign by FC		Sign by ED	
5) IB Authorisations	☑	Sign by FC		Sign by ED	

17/01/24

Comments:

RECIEVED
DATE 9/1/2024
PACIFIC GAMES SOLOMON ISLANDS SIGN

10:58 LTE
apib1.anz.com

ANZ

Transaction or Request Lodgement Receipt

Transaction or Request Description:	ANZ to ANZ Transfer
Transaction or Request Status:	Posted
Date / Time:	17/01/2024 12:54
Transaction Number:	AHP80833

Transaction Details:

Account Transfer of SBD 660,309.35

From Account: 5691140
To Account: 4369199

Notes for Recipient: Access road & drainage- Medical Centre- Burnscreek
Notes for Myself: Paymnt No.03-20% - Inv#61

Pay Date : 17/01/2024

Comments:
* * * * * * * * * * * Authorisation Details * * * * * * * * * * * *
17/01/2024 12:54 Gregory Sale
Authorisation Required for : Transfer Between My Accounts (2A)
18/01/2024 08:40 Christian Nieng
Authorised -Transfer Between My Accounts
Comments : Verified
18/01/2024 10:58 Debbie Ofaeri Sifoni
Authorised -Transfer Between My Accounts
18/01/2024 10:58 Debbie Ofaeri Sifoni
Transaction Processed
* *

PAID
DATE 18/01/24 CHQ. No.

©Copyright Australia and New Zealand Banking Group Limited ABN 11 005 375 522, 1996-2024. ANZ's colour blue is a trade mark of ANZ.

3

NATIONAL HOSTING AUTHORITY
P O Box 2443
Honiara, Solomon Islands
E:Accounts@sol2023.com.sb

PAYMENT VOUCHER	
DATE	12/01/2024

ROPIKO ENTERPRISE LTD
Honiara
Solomon Islands

Cheque Number IB TRANS
Total Amount Paid $660,309.35

Payment No.03 (20%) for Construction of Access Road and Drainage System at Burnscreek for Medical Health Centre for PG2023.

In Payment For the following invoices:

Supplier Inv	Purchase No.	Invoice Date	Invoice Amount	Previous Payments	Current Payment
	00001724	7/09/2023	$3,301,546.75	$2,311,082.73	$660,309.35

For. FC NHA
12/1/2024

for: ED/NHA
15/1/2024

15/1/2024

Payment Voucher Prepared By: _____ Date: 12/01/24

Signature of Claimant: _____

PRINT NAME: _____

PAYMENT SCHEDULE

COMSTRUCTION OF ACCESS ROAD AND DRAINAGE SYSTEM AT BURNSCREEK FOR MEDICAL HEALTH CENTRE PG2023

ROPIKO ENTERPRISES LIMITED

Payment No.	DATE		Award Amount	Retention 5%	With Holding Tax 7.5%	Amount Paid	Status
			3,569,239.73				
No.1	7/09/2023	50%	1,784,619.87		133,846.49	1,650,773.38	Paid
No.2	8/11/2023	20%	713,847.95		53,538.60	660,309.35	Paid
No.3	12/01/2024	20%	713,847.95		53,538.60	660,309.35	Payment in progress
No.4		10%	356,923.97		26,769.30	330,154.68	
					-	-	
TOTAL			***3,569,239.73***	-	***267,692.98***	***3,301,546.75***	

NATIONAL HOSTING AUTHORITY

REQUISITION NUMBER: PMU-1315/23

DEPARTMENT: PMU

PURCHASE REQUISITION

QUANTITY	UNIT	DESCRIPTION (Full and clear details of payment)	PURCHASING OFFICER USE ONLY SUPPLIER	ORDER NO.	COST
1	LS	Payment progress 3 of 20% for Completion works of Construction of Access Road & Storm Water Drain at Burnscreek for the PG2023 Health Centre	ROPIKO ENTERPRISE LIMITED		$713,847-95
				TOTALS	$713,847-95

Approval is requested to incur expenditure on the above

Estimated Cost (SBD): $713,847-95 Date: 21/12/23

Requisition Officer (Name): SOLEANDA CAGATTE Sign:

Account Code: 6-2717

Account Name: Other Land & Other Costs

Funds available on this account:

Supervisors Certification (Accountable Officers):

Certifying Officer (Name): LEEROY BIRD Sign:

Post: ED (PMU)

Department: GFC - PMU

Authority is granted for expenditure not exceeding:

SBD$ 713,847.95

Signed: 2/1/24

P.P. CHRISTIAN NIENG

Name:

Note: Authority for expenditure must be given by accounting officer or his/her deligated

Threshold Checklist

Payment requires one quote (10,000 below)	
Payment requires three quotes ($10,000.00 above)	
Is it a ITB Contract Payment	
Is it a GTB Contract Payment	
Payment is a Bid Waiver	

Compliance Check by: Signature

Name: Jeff Mola Date: 9/01/2024

Position: Comptroller

Copy 1 White NHA Finance
Copy 2 Pink Compliance Department
Copy 3 Yellow Requesting Department

NATIONAL HOSTING AUTHORITY

REQUISITION NUMBER: PMU - 1315/23

DEPARTMENT: PMU

PURCHASE REQUISITION

QUANTITY	UNIT	DESCRIPTION (Full and clear details of payment)	PURCHASING OFFICER USE ONLY SUPPLIER	ORDER NO.	COST
1	LS	Payment progress 3 of 20% for completion works of Construction of Access Road & Storm Water Drain at Burnscreek for the PG2023 Health Centre	ROPIKO ENTERPRISE LIMITED		$713,847-95
				TOTALS	$713,847-95

Approval is requested to incur expenditure on the above

Estimated Cost (SBD): $713,847-95 Date: 12/12/23

Requisition Officer (Name): SOLEANDA CAGATHE Sign:

Account Code: 6-2717

Account Name: Sth Local Other Cost

Funds available on this account:

Supervisors Certification (Accountable Officers):

Certifying Officer (Name): LEEROY BIRD Sign:

Post: ED (PMU)

Department: GFC - PMU

Authority is granted for expenditure not exceeding:

SBD$ 713,847.95

Signed: 12/1/24

P.P: CHRISTIAN NIENG

Name:

Note: Authority for expenditure must be given by accounting officer or his/her deligated

Threshold Checklist

Payment requires one quote (10,000 below)	
Payment requires three quotes ($10,000.00 above)	
Is it a ITB Contract Payment	
Is it a GTB Contract Payment	
Payment is a Bid Waiver	

Compliance Check by: Signature

Name: Jill Mebi Date: 10/1/2024

Position: Compliance

Copy 1 White NHA Finance
Copy 2 Pink Compliance Department
Copy 3 Yellow Requesting Department

C5

NATIONAL HOSTING AUTHORITY
SOLOMON ISLANDS GOVERNMENT

CONTRACT PAYMENT AND COMPLIANCE CHECKLIST
(For payment of contracts over $100,000)

This checklist is to be submitted along with contracts payments for works, goods and services

Required documents Prepared by Committee/Department	FI Ref	Committee	Procurement	Finance
Purchase Requisition (PR) for the entire value of the contract	**P7 35**			✓
Draft Contract **(not yet signed by Supplier)**	**P7 10.1**			
Tender Award by ITB/GTB	**P7 10.1**			✓
PR signed by requisition officer				✓
Vendor Information Form (for new vendor)				
ICT Checklist attached (if for ICT equipment)				
Progress Report of works/Photos etc				
Completion report if goods/services and works have been completed				
Other reports if any (goods and services)				
Payment certificate from Engineer matching amount in Requisition				
Invoice from Contractor matching amount in requisition				✓
Compliance checks required and done by Procurement				
Contract form approved and Signed by Chairman/EDs	**P7 27.2**			✓
PR has been signed by authorized person (and not approving payment to themselves)	**P7 44**			✓
Check amount on PR matches the signed contract				
Account code used is correct	**P7 38.5(e)**			✓
Name on PR matches signed contract	**P7 38.5(e)**			✓
Check price and rates are reasonable	**P7 43.2(b)**			✓
Data entry checks for PV and Cheque payments done by Finance Department				
Amount entered in AX matches Requisition				✓
Account code in AX matches Requisition				✓
Vendor name in AX matches Requisition				✓
Item code and Units entered (e.g. box, each) correctly				✓
Description has enough detail				✓
Check dates on future instalments entered correctly				
Budget OK				✓

Note: If any of the above is not able to be certified please include an explanation of why. This will speed up the compliance process.

Department Compliance performed by:

Signed: _____

Name and Position: Luke de Pitzkow (PM)

Date: 11/01/24

Procurement section Compliance performed by:

Signed: _____

Name and Position: Tamara Buick C.P.O

Date: 11/01/24

Finance Department Compliance performed by:

Signed: _____

Name and Position: N. Vuleva

Date: 12/01/24

NATIONAL HOSTING AUTHORITY
XVII 2023 PACIFIC GAMES

C/-P.O. Box 2443
Honiara
Solomon Islands

Phone:
677 7308800

Facebook page:
Sol2023 XVII Pacific Games

MEMORANDUM

To: Executive Director, NHA 12/1/24

Thru: Executive Director, PMU 22/12/23

From: Cora Sita Makini, PMU

Ref: CSM - 221223

Date: Friday 22nd December 2023

SUBJECT: PAYMENT 3 APPROVAL FOR ROPIKO ENTERPRISES LIMITED FOR CONSTRUCTION OF ACCESS ROAD AND DRAINAGE SYSTEM FOR PG2023 HEALTH CENTRE, BURNSCREEK

Dear ED,

The PMU Team is **requesting approval for payment towards Ropiko Enterprises Limited for the construction of the access road and drainage system for the PG2023 Health Centre.** The payment is part of Payment No. 3 under Section IV: Payment Schedule, which covers completion of 50% of total Works as per the Scope of Works.

The total amount rendered for 20% payment **SEVEN HUNDRED AND THIRTEEN THOUSAND, EIGHT HUNDRED AND FORTY – SEVEN SOLOMON BOKOLO DOLLARS AND NINETY – FIVE CENTS ($ 713,847.95)**.

Please find attached the invoice, weekly site reports, payment certificate, approval of the selected Contractor, contract and Addendum No. 1 to the Contract.

We kindly seek your urgent approval.

Yours sincerely,

Cora Sita Makini
Project Manager, PMU

14th December 2023
Progress_Report.docx

NHA Ref: CSM-141223

Mr. Leeroy Bird
Executive Director
Project Management Unit
Games Facilities Committee
National Hosting Authority
Old Sea King Building, Point Cruz, Honiara, Guadalcanal
SOLOMON ISLANDS

To Mr. Leeroy BIRD,

PROJECT: **10 MEDICAL CLINIC**
SUBJECT: **PROGRESS REPORT FOR CONSTRUCTION OF ACCESS ROAD AND STORM WATER DRAIN AT BURSNCREEK FOR PG2023 HEALTH CENTRE**

1 INTRODUCTION

1.1 This report is to supplement Ropiko Enterprises Ltd report and invoice for Payment No.3 (20%) of the construction of the access road and storm water drain for the PG2023 Health Centre.

1.2 This payment of 20% was amended to revise the Contractor's payment schedule to cover the remaining works which are now complete.

1.3 Refer to the attached for Addendum No.1.

2 PROGRESS TO DATE

2.1 Below shows a summary of the works completed to supplement Ropiko Enterprises Ltd claim:

Date	Works Completed	Photos

1. 13 – 20 November 2023	• Completion of the access road R2 (Pastor's house to the canopy of the clinics main entrance) • Concrete pouring. • Installation of steel pipes (bollards) for the kerbs • River gravel spread throughout as well where needs to be filled	 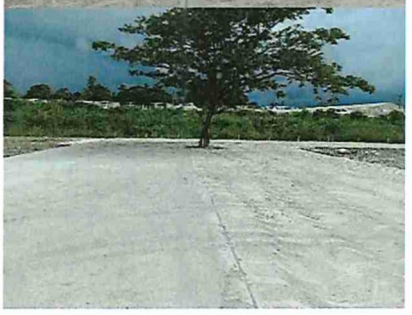  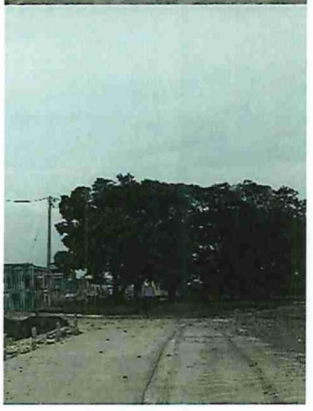

3 PHOTOS OF WORKS

3.1 Tabulated in Section 2 Progress to Date.

4 CONCLUSION

4.1 The Contractor has fulfilled the milestones set in Payment Schedule: Payment 3 for completion of the access road.

4.2 With this, the Contractor is entitled to Payment 3 at 20% payment.

Yours faithfully,



CORA SITA MAKINI
Project Manager
Project Management Unit
Games Facilities Committee
National Hosting Authority
7234094

P.O. BOX 2443 Sea King Restaurant Building, Honiara, Solomon Islands

PROGRESS PAYMENT CERTIFICATE NO: 03

Payment Schedule Name:	Payment No. 3		
Project Name:	Construction of Access Road and Drainage System at Burnscreekfor the 2023 PG2023 Medical Health Centre		
Contractor:	Ropiko Enterprises Limited		
Project Manager	Cora Sita Makini	**Certificate:**	PC - 03
Contract Administrator:	Hazel Hinai	**Date Invoice Received:**	21-Nov-23
		Date Issued for payment:	22-Dec-23
		Contract No:	N/A

A PROGRESS CLAIM SUMMARY

REF	PROGRESS CLAIMS	CONTRACT DETAILS	PAYMENT DETAILS	NOTES
	Contract Value	$ 3,569,239.73		
1	Payment 1 (50%) - Mobilisation made upon Contracor's mobilisation to site, site clearance and commencement of works	$ 1,784,619.87	$ 1,287,698.12	Issued for payment
2	Payment 2 (20%) - completion of 50% of works as per the Scope of Works	$ 713,847.95	$ 713,847.95	Issued for payment
3	Payment 3 - completion of remaining works for access road	$ 713,847.95	$ 713,847.95	Issued in this claim
5	**Progress Claim to date**	**$ 3,212,315.77**		
6	**Original Contract Value**	**$ 3,569,239.73**		
7	**Total Adjusted Contract Value**	**$ 3,569,239.73**		
8	**Balance of Contract Payment**	**$ 356,923.96**		

B PAYMENT DETAILS

	Progress payment for this claim	$ 3,212,315.77	
	Retention-Purchaser retains 5% of this payment pursuant to clause	$ -	
	Amount payable for this claim after Retention	$ 3,212,315.77	

Payment is certified as conform to payments terms and conditions as stated in article 10:

Payment is hereby certified: ..... *Cora Sita Makini (Project Manager)* — 22/12/23 *Date*

Compliianced and approved by: ..... *Soleana Gagahe (Contract Administrator)* — 22/12/23 *Date*

Claim is hereby approved for payment by: ..... *Leeroy Bird Executive Director - PMU* — 22/12/23 *Date*

On presentation of this original to the Employer, the Contractor is entitled to payment within the period stated in the Agreement: Article 10.

ROPIKO ENTERPRISES LIMITED
P.O.BOX 1817, Honiara.
SOLOMON ISLANDS.
Ph No: 677 28065 & 28066

Invoice No. 61

INVOICE

Customer

Name	National Hosting Authority
Address	P.O.Box 2443
City	Honiara State Vanual ZIP
Phone	+677 42100

Misc

Date	21.11.2023
Order No.	
Rep	
FOB	

Qty	Description	Unit Price	TOTAL
1	Being for 20% Payment for the Project of Construction of Access Road and Drainage System at Burnscreek for PG2023 Medical Health Centre	$ 713,847.95	$ 713,847.95
	Bank Name: Australia New Zealand (ANZ) Bank		
	Account Name: Ropiko Enterprises Limited		
	Account Number: 4369199		

SubTotal		$ 713,847.95
Shipping		$ -
Tax Rate(s)	0.00%	$ -
TOTAL		$ 713,847.95

Payment Select One...

Comments
Name Ropiko Enterprises Limited
CC #
Expires

Office Use Only

ROPIKO ENTERPRISES LIMITED

Weekly Construction Report

Project Title:	Construction of Access Road and Drainage System at Burns creek For The Pacific Games 2023 Medical Health Centre – Contract No:

Date:	13th to 20th Nov 2023	**Day:**	Monday to Monday.	**Report No:**	10

Workmen:

Personnel	Male	Female	Major Equipment on site	
Names	No.	No.	Equipment	No.
Project Manager	1		Excavator	
Supervisor	1		Loader	
Foremen			Drum Roller	1
Leading hand			Dump Trucks	1
Carpenter	7		Motor Grader	1
Plumber			Backhoe	
Electrician			Mixer Truck	1
Welder			Service Truck	1
Machine Operator				
Truck Driver	1			
General Labourer (Skilled/ Semi-Skilled)				
Others (List):				
Total	10			5

If others, provide description:

Visitors to the sites (Name, Title, Purpose):

No.	Name of person	Title of person	Purpose of visit
1.			
2.			

Safety:

	No.	Descriptions
Accident		None
Injury		None
Unusual Events		None

Progress of Works:

Activities and Material Deliveries

	Descriptions
Activities	1. Supply, cut and install 4 inches galvanised Pipes for Kerb at the access road at PG23 Clinic. 13th November 2023.
	2. Prepare the final stage of access road and concrete slab. 14th November 2023.
	3. Final pouring of concrete slab at the PG23 Clinic at Burns creek. 16th November 2023
	4. Supply and spread River Gravel to complete Access Road at PG23 Clinic at Burns creek. 20th November 2023.
Material Deliveries	
	1. 10 x Length of 4' Galvanised Pipes.
	2. 4 x bag Cements
	3. 11 x Cubic meters of Ready Mix Concrete.
	4. 36 x Cubic meters of River Gravel.

Meeting and Significant Decisions

None.....

.....

.....

.....

Unsolved Issues/ factors causing Delay.

- None.....

.....

.....

Project Manager: Mr Roland Piko .....

Signature

Photos:













Practical Completion Certificate

Contract: *Construction of Access Road and Drainage System at Burnscreek for the 2023 PG2023 Medical Health Centre.*

Location: *Burnscreek, East Honiara, Guadalcanal Province.*

Description: *Construction of the access road and drainage system for the PG2023 Health Centre.*

Practical Completion

Practical Completion means that the Contract Works or a Separate Section of the contract attain Practical Completion when:

(a) they are able to be used for their intended purpose without material inconvenience;

(b) they have generally been built in accordance with the Contract documents;

(c) they are complete except for:

(i) minor defects and minor omissions for completion during the Defects Liability Period;

(ii) omissions and defects which the Architect becomes aware of during the Defects Liability Period;

(iii) any undiscovered, latent or other defect or omission which the Architect could not have reasonably discovered;

(iv) work which the Architect and the Contractor have agreed to defer for completion during the Defects Liability Period, or such later date as agreed between the parties.

(d) Information and warranties listed in the Specific Conditions have been provided.

This Certificate

This is to certify that the Contract Works have been inspected and qualified for Practical Completion on 19/12/2023

Inspection of the aforementioned works has been carried out on 19/12/2023

This certificate is provided to the Principal and Contractor only, and for the purposes set out in this Contract. It is not to be used by the Principal, the Contractor, or any other person, for any other purpose. No waiver of this clause by the Architect shall be effective unless it is in writing.

Issued by: COCO SITA MAKUNI 22/12/2023

(Project Manager) *(Date)*

Signed by/date: Leeroy. B 22/12/23

(Executive Director) *(Date)*

Copy to Contractor

PACIFIC GAMES
SOLOMON ISLANDS

ADDENDUM NO. 1

ADDENDUM TO PAYMENT SCHEDULE OF THE CONTRACT

FOR

CONSTRUCTION OF ACESS ROAD AND DRAINAGE SYSTEM AT BURNSCREEK FOR THE PG2023 MEDICAL HEALTH CENTRE

Between

NATIONAL HOSTING AUTHORITY

(Solomon Islands Government)

And

ROPIKO ENTERPRISES LIMITED

Issued 30th October 2023

ADDENDUM TO THE CONTRACT

THIS ADDENDUM TO THE CONTRACT ("Contract") is entered into between **NATIONAL HOSTING AUTHORITY, (NHA) ("the Purchaser")** having its principal place of business at OLD SEA KING BUILDING, POINT CRUZ, HONIARA, and **Ropiko Enterprise ("the Contractor").**

The Parties entered into the Contract Agreement for the **Construction of access road and drainage system at Burns Creek for the PG2023 Medical Health Center**, had on this date agreed to changes and amendment of the contract terms and conditions. The clauses referred herein shall repeal or include and shall form part of the final Contract.

All expressions and terms defined or used in the original Contract Agreement shall have the same meaning in this Addendum unless the context clearly requires otherwise.

1.0: AMENDMENT OF THE CONTRACT AGREEMENT IS AGREED AS FOLLOWS:

The amendment to the original contract terms and conditions shall supersede the referenced clauses of the contract as mentioned below and effectively enforced herewith.

1. **AMENDMENT 1: SECTION IV: PAYMENT SCHEDULE** - The Payment Schedule has been amended as follows:

SECTION IV: PAYMENT SCHEDULE

This payment schedule is part of contract and is crucial part of which contractor shall be remunerated. This schedule is referred to the Contractors performance and claims. Upon inconsistencies of work schedule and claims, this schedule supersedes contractors work schedule where it shall be revised to compromise with this schedule.

CONTRACT VALUE			**SBD$ 3,569,239.73**
PAYMENT NUMBER	**MILESTONE DESCRIPTION**	**AMOUNT CLAIMED**	**AMOUNT DUE PAYABLE**
Payment No. 1	Mobilization (50%) shall be made upon Contractor's mobilization to the site, site clearance & commencement of works at the site	**$ 1,784,619.87**	**$ 1,784,619.87**
Payment No.2	(20%) Payment shall be made upon completion of 50% of total Works as per the Scope of Works - upon verification by the Client's Project Manager	**$713,847.946**	**$713,847.946**

Payment No.3	(20%) Payment shall be made upon completion of the remaining 50% of total Works as per the Scope of Works, upon verification by the Client's Project Manager, and the issuance of the Certificate of Practical Completion to the Contractor	**$713,847.946**	**$713,847.946**
Payment No.4	(10%) Defects Liability Period payment shall be paid upon satisfaction of all defects rectified by the Contractor after one month of Practical Completion	**$ 356,923.97**	**$ 356,923.97**
TOTAL			**$ 3,569,239.73**

Both parties agreed herein for the amended clauses and parts of the original contract fully supersedes the original and agreed clauses and parts referenced.

This amendment shall form part of the contract and can be read or interpreted part of the original Contract.

Any further amendment shall not be considered unless otherwise agreed by both Parties.

IN WITNESS whereof the parties hereto have caused this Agreement to be executed in accordance with their respective laws the day and year first above written.

For the Purchaser- National Hosting Authority		**For the Contractor**	
Name:	Christian Nieng	**Name:**	Roland Piko
Signature:		**Signature:**	
Designation:	Executive Director National Hosting Authority	**Designation:**	Managing Director Ropiko Enterprises Limited

Date: 6../.11.../2023 **Date:** 31./.10../2023

As witnessed by Project Management Unit (GFC) Representative:

Name: Leeroy Bird

Signature: _____

Designation: Executive Director, PMU

Date 1../.11.../2023

CONTRACT AGREEMENT

FOR

CONSTRUCTION OF ACCESS ROAD AND DRAINAGE SYSTEM AT BURNSCREEK FOR THE 2023 PG2023 MEDICAL HEALTH CENTRE

BETWEEN

NATIONAL HOSTING AUTHORITY

(Solomon Islands Government)

AND

ROPIKO ENTERPRISES LIMITED

August 2023

SECTION I: CONTRACT AGREEMENT

This Contract Agreement is made between the two parties mentioned as the Purchaser and Contractor herein described as below.

The Purchaser

The Purchaser herein named as the Government of the Solomon Islands, which has its seat in Honiara, represented by the **National Hosting Authority**, legally represented in this matter by **Mr Christian Nieng**, the **Executive Director - NHA**, hereinafter referred to as the Purchaser,

And

The Contractor:

The Contractor herein named as **Ropiko Enterprises Limited** which has its registered office in Honiara, legally represented in this matter by **Mr Roland Piko**, hereinafter referred to as the Contractor, and have agreed to conduct **CONSTRUCTION OF ACCESS ROAD AND DRAINAGE SYSTEM AT BURNSCREEK FOR THE 2023 PG2023 MEDICAL HEALTH CENTRE** herein mentioned as Works specified in the Scope of Works.

1. The price for the execution of Works is confirmed in the Bill of Quantities as part of your Request for Quotation submission that was submitted for approval on **Tuesday 29th August 2023.**
2. The total accepted Bid Price shall be **SBD$ Three Million Five Hundred and Sixty-Nine Thousand Two Hundred and Thirty-Nine Dollars and Seventy-Three Cents (SBD $3,569,239.73).** The agreed price for the execution of the Works is fixed for the duration of the Contract.
3. The place where the Works have to be executed shall be at **Burnscreek Adventist High School, Burnscreek, Guadalcanal,** at the specific site as selected by the Client.
4. The time limits for execution of the Works shall be maximum of **1.5 months** and shall be on the basis turnkey specific contract process.
5. The Contractor shall strictly comply with the terms and conditions as mentioned in the Special & General Contract Conditions for the Execution of Works and the Technical Specifications/Bill of Quantities/Drawings. Any general and special terms and conditions drawn up by the Contractor do not apply.
6. The Contractor, herein **Ropiko Enterprises Limited** shall make invoice(s) to the Purchaser at the Address mentioned as Project Management Unit of National Hosting authority, quoting the, the amount of progress payment as per Schedule and above-mentioned Contract number and name.
7. This Contract is subject to the provisions of the attached General Conditions of Contracts for the Execution of Works.
8. This Contract is made up of the following documents, in order of precedence:

- *this Contract Agreement*

SIGNING OF CONTRACT AGREEMENT

This Contract enters into force on the date on which it is signed by both Parties [and ends as soon as the Execution of the Works has been completed].

IN WITNESS whereof the parties hereto have caused this Agreement to be executed in accordance with the laws of Solomon Islands on the day, month and year specified above.

Parties to this Contract hereby agreed and signed as follows:

For the Purchaser - National Hosting Authority		**For the Contractor**	
Name:	Christian Nleng	**Name:**	Roland Piko
Signature:		**Signature:**	
Designation:	Executive Director National Hosting Authority	**Designation:**	Managing Director Ropiko Enterprises Limited
Date:	04/09/2023	**Date:**	31/08/2023

Witness signing by Project Management Unit/NHA

Signature	
Name:	Leeroy Bird
Title:	Executive Director
Date:	1/09/2023

the delivery location specified by the Purchaser, and the Contractor will bear all costs and risks connected with the delivery of the Works, including, where applicable, the import duties and responsibility for complying with the associated formalities.

3.2 The agreed delivery date(s) or period(s) are fixed and final. If the Works are not delivered at the agreed location within the agreed period, the Contractor will be in default without notice of default being required.

3.3 Delivery of the Works earlier than the agreed delivery date(s) or period(s) will take place only after prior written consent has been obtained from the Purchaser and will not alter the agreed payment date.

3.4 The Purchaser has the right to defer Delivery unless this would place a disproportionate burden on the Contractor. The Contractor is obliged to maintain the Works for the Purchaser at no additional cost until the deferred Delivery date, unless this would place a disproportionate burden on the Contractor, in which case the Parties will hold discussions to find a reasonable arrangement acceptable to both Parties. The provisions of Articles 3.2, 3.4 and 14 apply to the Delivery deferred by the Purchaser, except that the Contractor will be in default, without prior notice of default, only after the deferred delivery date(s) or period(s) have been exceeded.

Article 4 Guarantee

4.1 The Contractor guarantees that the delivered Works complies with the Specifications and Performance Requirements the Contractor has been bidding against and which have been accepted by the Purchaser by issuing this Contract, is free of defects and is suitable for the purpose for which the Works are intended. The Works does not comply with the Contract if the Product does not have the characteristics the Purchaser might expect based on the Contract.

4.2 If the Purchaser has not provided a more detailed description of the requirements to be delivered by the Contractor, the Works should in any event be of good quality and meet at least the Construction and Building standards as applicable on the Solomon Islands, customary requirements concerning soundness, fitness for purpose and workmanship, and all requirements and customary industry regulations concerning quality, safety, health and the environment.

4.3 The Purchaser may no longer refer to the fact that the Works does not comply with the Contract if it has not notified the Contractor accordingly in writing within 60 days of discovering this fact. If the Contractor receives such a notification from the Purchaser, the Contractor will rectify the defect or non-conformity within a period set by the Purchaser in accordance with the provisions of Article 13.

4.4 The Contractor guarantees that the delivered Works is free of any special encumbrance or restriction that the Purchaser has not accepted explicitly and in writing. The Contractor indemnifies the Purchaser against all claims in this regard.

4.5 The Purchaser may demand that, as security for compliance with, inter alia, the Contractor's Defects Liability Period obligations under this Contract, a guarantee may be required in a form of a Bankers Guarantee through a bank accepted by the Purchaser.

4.6 The Purchaser may demand that, as security for the completion of the Contract, and the Contractor's performance obligations under this Contract, a Performance Guarantee in the form of a Bankers Guarantee through a bank accepted by the Purchaser.

a. the notification can be consulted by the addressee.
b. the authenticity of the notification is sufficiently guaranteed; and
c. the identity of the sender can be determined with sufficient certainty.

Article 8 Confidentiality

8.1 The Contractor will not disclose in any way any information that is provided by the Purchaser or that is made known to it or comes to its knowledge, which it knows or may reasonably suspect to be confidential, except in so far as it is compelled to disclose such information under a court ruling.

8.2 The Contractor will pass-on the duty of confidentiality referred to in this article on all staff or sub-Contractors it engages in the performance of the Contract and will ensure that this duty is observed.

8.3 The Contractor will not issue press releases or make other public statements about the Contract except with the prior consent of the Purchaser.

8.4 If the Contractor breaches its duty of confidentiality, the Purchaser may impose a penalty, as laid down in the Special Conditions of Contract. Payment of the penalty, which is payable forthwith, does not discharge the Contractor from its liability for indemnifying any loss caused by the breach.

FINANCIAL PROVISIONS

Article 9 Prices

9.1 Unless agreed otherwise in writing, the price(s) agreed for the Works include the costs of transport, taxes, and import duties, other levies, insurance, packaging costs, incidental services, disposal costs and any assembly or installation costs.

9.2 The prices for the Works are fixed, unless the Contract specifies the circumstances that may lead to a price adjustment and the way such an adjustment should be made.

Article 10 Invoicing and payment

10.1 The Contractor will invoice the Purchaser for the delivered Works at the agreed milestones and at the agreed prices in accordance with the Price Schedule. The Contractor will send the invoice to the address specified by the Purchaser, stating the date and number of the Contract and other details requested by the Purchaser.

10.2 The Contractor will send the invoice in hard copy so that it can be received and processed in accordance with the specifications issued by the Purchaser.

10.3 The right to payment arises upon Delivery of agreed milestones or after Delivery of the Works, unless the Contract provides otherwise. The Purchaser will pay the price for the delivered Works within 30 days of receiving the invoice if it satisfies the provisions of the Contract. The Purchaser has the right to offset invoice amounts owed against amounts that the Contractor owes the Purchaser.

10.4 The Purchaser may withdraw retention payment from the Contractors milestone payments. The total sum of the accumulated retention payment shall be released after satisfactory performance after the Defects Liability Period and upon verification by the Client.

10.5 Payment of an invoice by the Purchaser does not recognize that the Product is in conformity with the guarantees given in accordance with Article 4.

a. replacement of the Contractor or replacement/repair of the Equipment incorporated into the Works by a third party at the Contractor's expense;

b. replacement of the Contractor or return of the Equipment incorporated into the Works at the Contractor's expense and risk and dissolution of the Contract in accordance with the provisions of Article 16 and, in consequence, crediting of however much of the purchase price has already been paid for the Works in question.

13.3 The provisions of paragraphs (13.1) and (13.2) do not affect other rights and claims that the Purchaser may derive from non-performance.

Article 14 Liability

14.1 A Party who fails to meet its obligations is liable to the other Party for any loss incurred by the other Party.

14.2 The Contractor indemnifies the Purchaser against any third-party claims for damages resulting from a failure as referred to in paragraph 1.

Article 15 Force Majeure

15.1 In the event of temporary force majeure, the Contractor will immediately notify the Purchaser in writing after the circumstances bringing about force majeure have occurred, stating the cause of the force majeure. The Purchaser then has the right to choose between:

a. Allowing the Contractor to defer compliance with its obligations under the Contract for a reasonable period of up to four weeks. If the Contractor is still unable to fulfil its obligations under the Contract when this time limit expires, the Purchaser has the right to dissolve the Contract with immediate effect, without being obliged to pay compensation or any costs to the Contractor.

or

b. Dissolution of the Contract with immediate effect, without being obliged to pay compensation or any costs to the Contractor.

15.2 In the event of long-term force majeure on the part of the Contractor, the Contractor will immediately notify the Purchaser and the Purchaser has the right to dissolve the Contract with immediate effect out of court, without being obliged to pay compensation or any costs to the Contractor.

15.3 The term 'force majeure' is in any event understood not to include: staff shortages, strikes, staff illness, shortages of raw materials, transport problems, breach of obligations by Contractors, failures in the Contractor's production process and liquidity or solvency problems on the part of the Contractor, or failures on the part of third parties engaged by the Contractor.

Article 16 Dissolution

16.1 Without prejudice to the other provisions of the Contract, either Party may dissolve the Contract in full or in part out of court by registered mail, without being obliged to pay any compensation to the other Party, if the other Party is in default or compliance is temporarily or permanently impossible.

exists. The Contractor will not terminate or alter the insurance contract without the Purchaser's prior written consent. The Contractor has no right to change the insured sum to the Purchaser's disadvantage without the Purchaser's prior written consent. The insurance premiums owed by the Contractor are deemed to be included in the agreed prices.

20.3 The Contractor assigns to the Purchaser in advance all rights to the payment of insurance proceeds as referred to in paragraph 20.1, in so far as such proceeds relate to damage for which the Contractor is liable to the Purchaser under the Contract. The Contractor is obliged to notify its insurance company in writing of this assignment and to send a copy of this written notice to the Purchaser, without prejudice to the Purchaser's right to notify the insurer itself. Any insurance proceeds paid directly by the insurer to the Purchaser will be deducted from the amount of compensation the Contractor is required to pay to the Purchaser in respect of the insured event.

Article 21 Bribery and conflicts of interest

21.1 The Parties will not offer to each other or to third parties, or ask for, accept or obtain a promise of, from each other or third parties, whether for themselves or for any other Party, any gift, reward, compensation or benefit of any form whatsoever if this could be construed as constituting an illicit practice. Such a practice may constitute grounds for dissolving the Contract either in full or in part.

21.2 If it transpires that one of the Purchaser's subordinates was in the Contractor's employment, regardless of whether or not such employment was paid, during the formation of the Contract, and that the Purchaser was not informed of this prior to the signing of the Contract, the Purchaser may dissolve the Contract with immediate effect out of court, without being required to give any notice of default or to pay any compensation.

Article 22 Invalidity

22.1 If one or more provisions of these General Contract Conditions or the Contract are found to be invalid or are nullified by a court, the remaining provisions will retain their legal force. The Parties will consult on the former provisions in order to make alternative arrangements. The alternative arrangements must not undermine the purport of these General Conditions for the Execution of Works or the Contract.

Article 23 Follow-up order

23.1 The Contract does not entitle the Contractor to any follow-up orders.

Article 24 Long-term obligations

24.1 Provisions which by their nature are intended to persist after the Contract has been performed will remain in force after the expiry of the Contract. They include the provisions on: guarantee (Article 4), confidentiality (Article 8), non-performance (Article 13), liability (Article 14), termination (Article 16.4), documentation (Article 18), assignment of insurance proceeds (Article 20.3), and disputes and applicable law (Article 25).

Article 25 Disputes and applicable law

25.1 Any dispute between the Parties in relation to the Contract will only be submitted to the competent Court of the Solomon Islands, unless the Parties agree an alternative means of dispute resolution.

25.2 The Contract is governed by the law of the Solomon Islands.

SECTION III: SPECIAL CONDITIONS OF CONTRACT

The following Special Conditions of Contract shall supplement the General Conditions of Contract for the Execution of Works for the Solomon Islands Government. Whenever there is a conflict, the provisions herein shall prevail over those in General Conditions for the Execution of Works (GCC). The corresponding Article numbers in the General Conditions of Contract are indicated below.

GCC Article	No.	Particulars
1. Definitions	1.5	a. THE PURCHASER IS: National Hosting Authority Solomon Islands Government P.O.Box 2443 Honiara, Solomon Islands b. THE CONTRACTOR: Ropiko Enterprises Limited P.O.Box 1817 Honiara Solomon Islands Email: ropikoenterprises@gmail.com c. THE LOCATION SITE IS: Burnscreek Adventist High School, Burnscreek, Guadalcanal
	1.12, 1.13	• THE PURCHASER'S PROJECT MANAGER IS: Cora Makini Project Management Unit National Hosting Authority Email: CMakini@sol2023.com.sb
		• THE CONTRACT ADMINISTRATOR IS. Soleana Gagahe Contracts Manager Project Management Unit National Hosting Authority Email: SGagahe@sol2023.com.sb • CONTRACTOR'S PROJECT MANAGER Roland Piko Ropiko Enterprises Limited P.O.Box 1817 Honiara Solomon Islands

9. Prices	9.1	The Contract price is fixed for the duration of the Contract.
	9.2	Variations of the Contract price may be granted by the employer provided the request for variation is made prior to the work being undertaken, and the variation is assessed by the Employer to be necessary and the price quoted is reasonable.
10. Payment	10.1	a) Payment for Works carried out under this contract shall be made in SBD. The Contractor is to submit a claim for Works completed. The Project Manager is to inspect the Works and if in grievance with the Contractor authorise payment of the claim. b) If there is a difference between the assessed Works complete and the claim amount the Contractor is to adjust the claim to match the value of the completed Works. c) Payment for milestone completion shall conform to the payment schedule as in section III of the Contract.
	10.6	In case payment is subject to SIG tax law, the latest information on the relevant withholding taxes and other payables are to be found at the website of the Inland Revenue Department: http://www.ird.gov.sb
11. Advance Payment	11.1	The first scheduled payment shall be the Mobilization Payment which shall be paid after the project has mobilized, materials have been delivered to site and work is ready to commence.
12. Penalty (Liquidated Damages)	12.1	Applicable rate for the Liquidated damages is: 0.1% per day.
14. Contractor's Liability	14.1	Notwithstanding Article 14.1 of the GCC, the Contractor's liability is twice the Contract value as stated in the Contract between Purchaser and Contractor.
20. Insurances	20.1	Contractor shall provide with their tender to following proof of insurance: - Workmen's Compensation As required by SI Law - Third Party Liability SBD 2,000,000 - Equipment for use in Project Replacement Value

SECTION V: SCOPE OF WORKS/ SPECIFICATIONS

1. CONSTRUCTION OF ACCESS ROAD TO PG2023 HEALTH CENTRE AT BURNSCREEK ADVENTIST SCHOOL COMPOUND

1.1 Introduction

The National Hosting Authority (NHA) through the Project Management Unit (PMU) is seeking to engage a skilled Contractor to construct an access road to the proposed PG 2023 Health Centre at Burnscreek Adventist School compound. The access road from the main entrance up to the clinic's main entrance covers an area of 1629.13 m^2.

The scope of work for this is split into three (3) components:

1. **Road 1 (R1)** – Access Road from the main entrance (blue gate) to the proposed boom gate for the clinic (concrete);
    a. **R1A**- Access Road part 1 whereby the road gradient is 0.53%.
    b. **R1B**-Access Road part 2 whereby the Road gradient is 2.4%.
2. **Road 2 (R2)** – Boom gate to the building's main entrance (concrete)

1.2 Site Locality

Location: The site whereby Works shall take place is within the Burnscreek Adventist School Compound.

1.3 Design Criteria

The access road must be according to the following criteria:

- The newly constructed road will be:
    - **R1**: Note that R1 is divided into 2 sections with a change to the gradient. Both R1A and R1B have a Road gradient of 1% fall to the fence line where the proposed drainage will be constructed.
        - **R1A**- From Chainages 0-64; **0.53%** road gradient.
        - **R1B**-From Chainages 64-126; **2.4%** road gradient.
    - **Spoon drain running on left side of R1 at 0.5 m wide x 63 m long x 0.15m deep.**
    - **R2**: **18.38 m wide x 46.05 m long; 1%** fall to the fence line.

1.4 Objective & Scope for Access Road

f. Backfill and spread using coronas fill material in the area indicated in *Section V of the Contract, Part 1.7 'Part 3 – Technical Drawings – Construction of Access Road.'* – this should cover low-lying water-logged area and R1;

g. Maintain falls for both R1 (R1A and R2B) and spoon drain.

h. Ensure the spoon drain runs 63m along the left side of R1 and runs diagonally across R1A to the main drain on the right. Refer to *Section V of the Contract, Part 1.7 'Part 3 – Technical Drawings – Construction of Access Road.'* for full details;

i. Fill and Compact;

j. Grade to desired falls as indicated in *Section V of the Contract, Part 1.7 'Part 3 – Technical Drawings – Construction of Access Road.'*;

E. Construction of Access Road

a. Ensure R1 is levelled, graded, and compacted to desired FL;

b. Prepare for spoon drain alongside R1 – refer to *Section V of the Contract, Part 1.7 'Part 3 – Technical Drawings – Construction of Access Road.'*;

c. Prepare and install formworks for concrete Works;

d. Prepare and install mesh for concrete pouring;

e. Ensure the proposed road level after compaction matches levels indicated in the drawings;

f. Refer to drawings attached in *Section V of the Contract, Part 1.7 'Part 3 – Technical Drawings – Construction of Access Road.'*

F. Post-Construction

a. Site clean-up;

b. Removal of excess material and/or debris if any;

c. Demobilise.

1.6 Part 2 – Concrete Road R2

A. Machinery

a. Provision of machinery associated with the job (excavator, grader, roller, dump truck, etc);

B. Site Preparation

a. Selection of Worksite, vehicle parks, and material dumps

b. Clearance of any vegetation;

c. Strip topsoil along R2 at 100mm depth;

CURRENT CONDITIONS

The site for the proposed access road is located within the Burnscreek Adventist School compound. The existing access road is a relatively low terrain that experiences boggy conditions during rainy weather due to a lack of drainage, soil type, and sections of soft and low areas.

SKILLS & EXPERIENCE

Minimum requirements to meet qualifications,

- Have professional and technical experts in road construction, earthworks.
- Experience in operating machinery for earthworks.
- TIN Number.
- Must be legally registered.
- Experience of a company with similar work.
- Schedule of Works-Proposed schedule to complete all Works by the required completion date.
- Valid liability insurance policy in place showing the limits of liability.
- Good working history with no background of non-compliance.

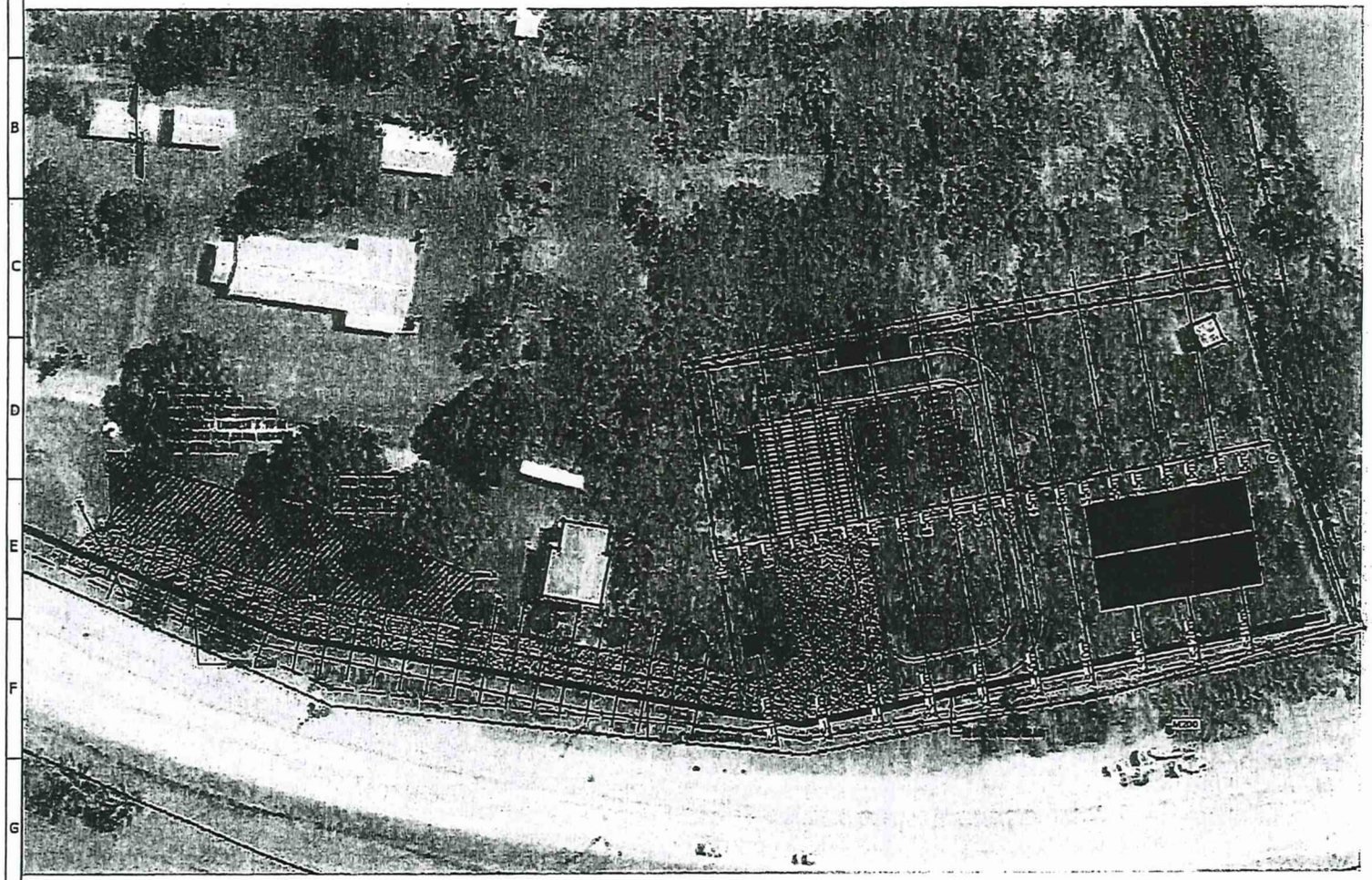

BACKFILL TOPO GAMES CLINIC ROAD

National Hosting Authority
2023 Pacific Games

All Architectural, Structural, Civil, Hydraulics and Landscape drawings shall remains the sole property of the owner and are not to be duplicate or copied without written permission.

ISSUE	DESCRIPTION	DATE
	CONCEPT DRAFT	-/-/-

PROJECT TITLE:
Sol2023, IF. GAMES
MEDICAL CLINIC.

DRAWING TITLE:
GAMES CLINIC SITE BURNS CREEK

CLIENT:
NATIONAL HOSTING AUTHORITY

ISSUE STAMP:

DRAWN. FN	CHECKED. -
APPROVED. -	SCALE. AS SHOWN
PROJECT No. -	PLOT DATE. 4-Aug-23
SHEET No. CIS-01	ISSUE No. A

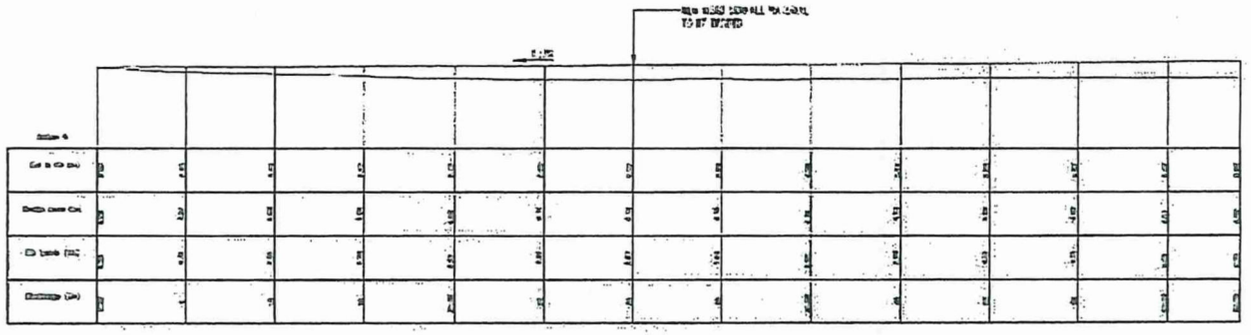

CLINIC ACCESS AL
Chainage 0–64m
Hor Scale 1:250
Ver Scale 1:250

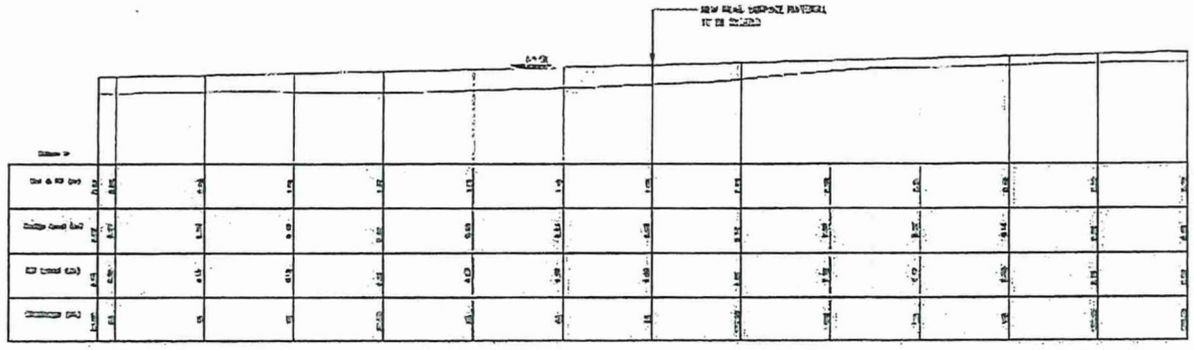

CLINIC ACCESS AL
Chainage 64–125m
Hor Scale 1:250
Ver Scale 1:250

National Hosting Authority
2023 Pacific Games

DWG	PRELIMINARY	FINAL
	CONCEPT DRAFT	

PROJECT TITLE:

2023 P. GAMES
MEREAI CLINIC

DRAWING TITLE:

MAIN ACCESS ROAD LONG SECTION PROFILE

CLIENT:

NATIONAL HOSTING AUTHORITY

ISSUE STAMP:

DRAWN:	CHECKED:
APPROVED:	SCALE: AS SHOWN
PROJECT No.	PLOT DATE:
SHEET No: C6-07	ISSUE No: A

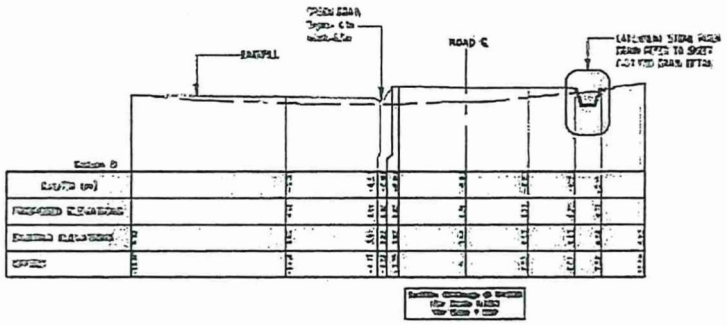

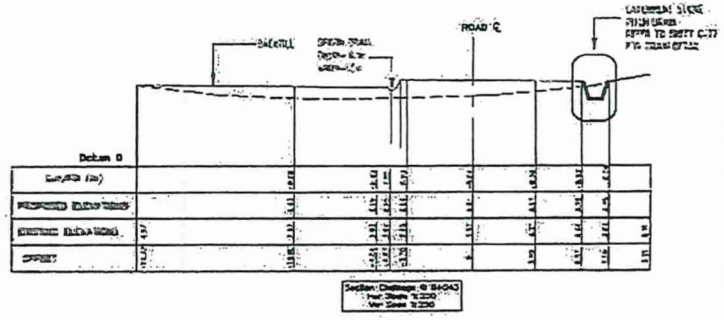

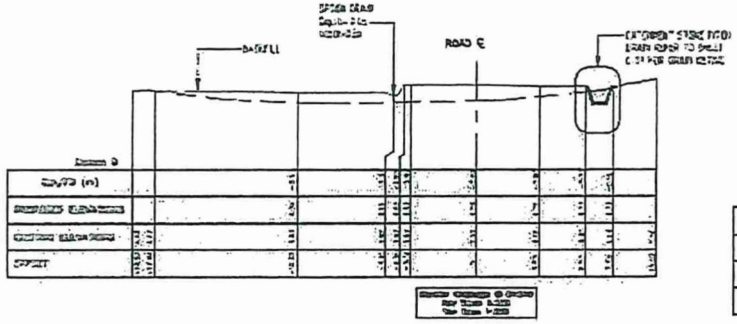

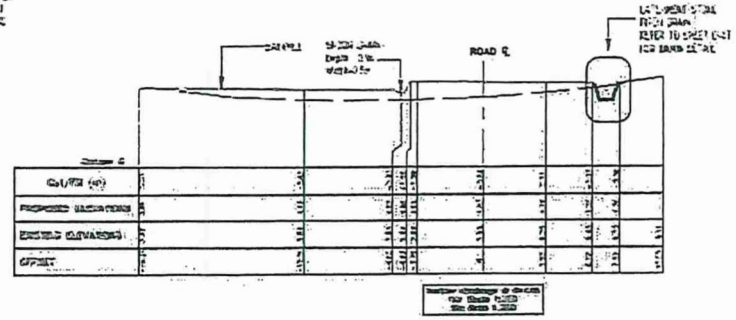

National Hosting Authority
2023 Pacific Games

ISSUE	REVISION DETAIL	DATE
	CONCEPT DRAFT	

PROJECT TITLE:

Sol2023, IF. GAMES MEDICAL CLINIC.

DRAWING TITLE:

ROAD ACCESS CROSS SECTION - GAMES CLINIC

CLIENT:

NATIONAL HOSTING AUTHORITY

ISSUE STAMP:

DRAWN: RA	CHECKED: -
APPROVED: -	SCALE: AS SHOWN
PROJECT No. -	PLOT DATE: 22-Aug-23
SHEET No. C5-04	ISSUE No. A

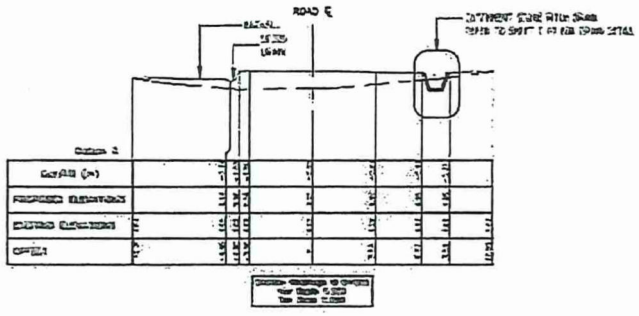

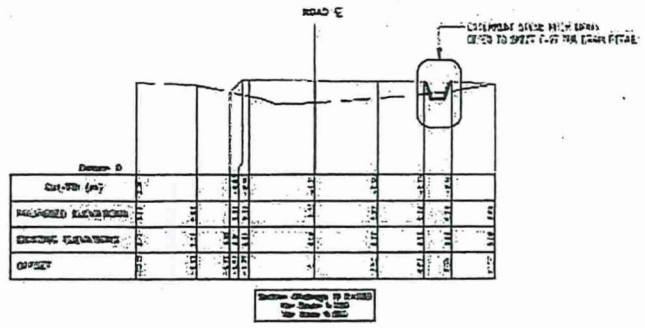

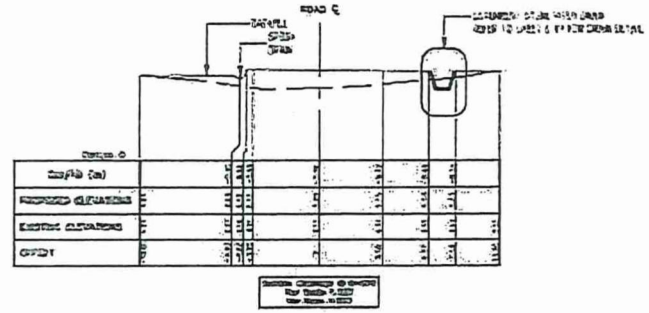

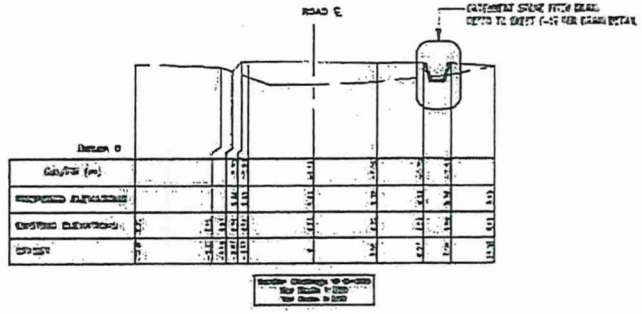

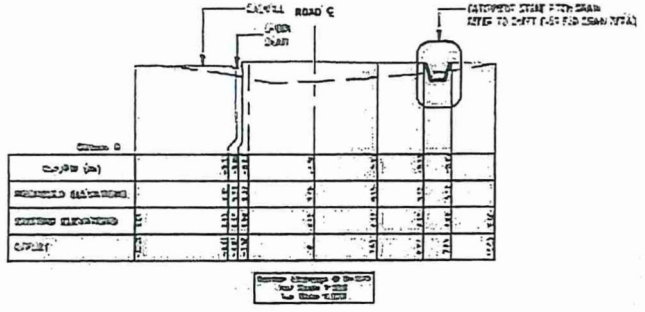

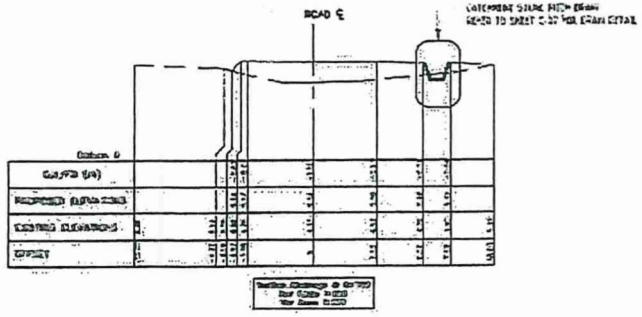

National Hosting Authority
2023 Pacific Games

ISSUE	DESCRIPTION	DATE
	CONCEPT DRAFT	-/-/-

PROJECT TITLE:

Sol2023: IF. GAMES MEDICAL CLINIC.

DRAWING TITLE:

ROAD ACCESS CROSS SECTION - GAMES CLINIC

CLIENT:

NATIONAL HOSTING AUTHORITY

ISSUE STAMP:

DRAWN: N.I	CHECKED: -
APPROVED: -	SCALE: AS SHOWN
PROJECT No. -	PLOT DATE: 23-Aug-23
SHEET No. CS05	ISSUE No. A

CLINIC SITE LONG SECTION PROFILE AND CROSS SECTIONS	
PAGE	*CONTENT*
CCS-07	LONG SECTION PROFILE
CCS-08	CROSS SECTION
CCS-09	CROSS SECTION
CCS-10	CROSS SECTION
CCS-11	CROSS SECTION

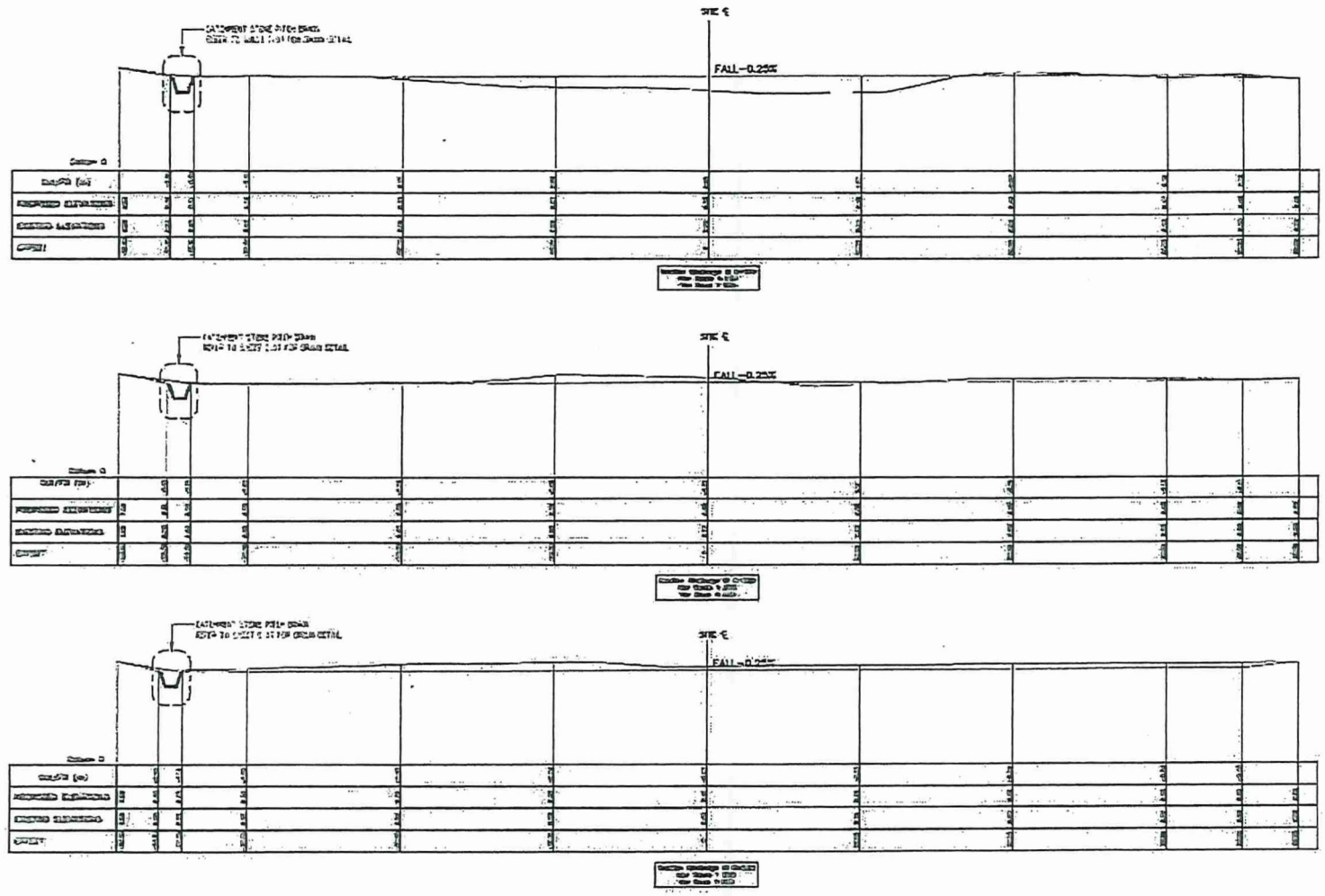

National Hosting Authority 2023 Pacific Games	Client: NATIONAL HOSTING AUTHORITY	Issued Stamp
ISSUE: A — DESCRIPTION: CONCEPT DRAFT — DATE: -/-/-	Project Title: 2023, P. GAMES MEDICAL CLINIC	Drawn by: F.M. / Checked: -
	Drawing Title: CLINIC SITE CROSS SECTION PROFILE	Approved: - / Scale: -
		Project No.: - / Plot Date: -
		Sheet No.: CCS-05 / Issue No.: -

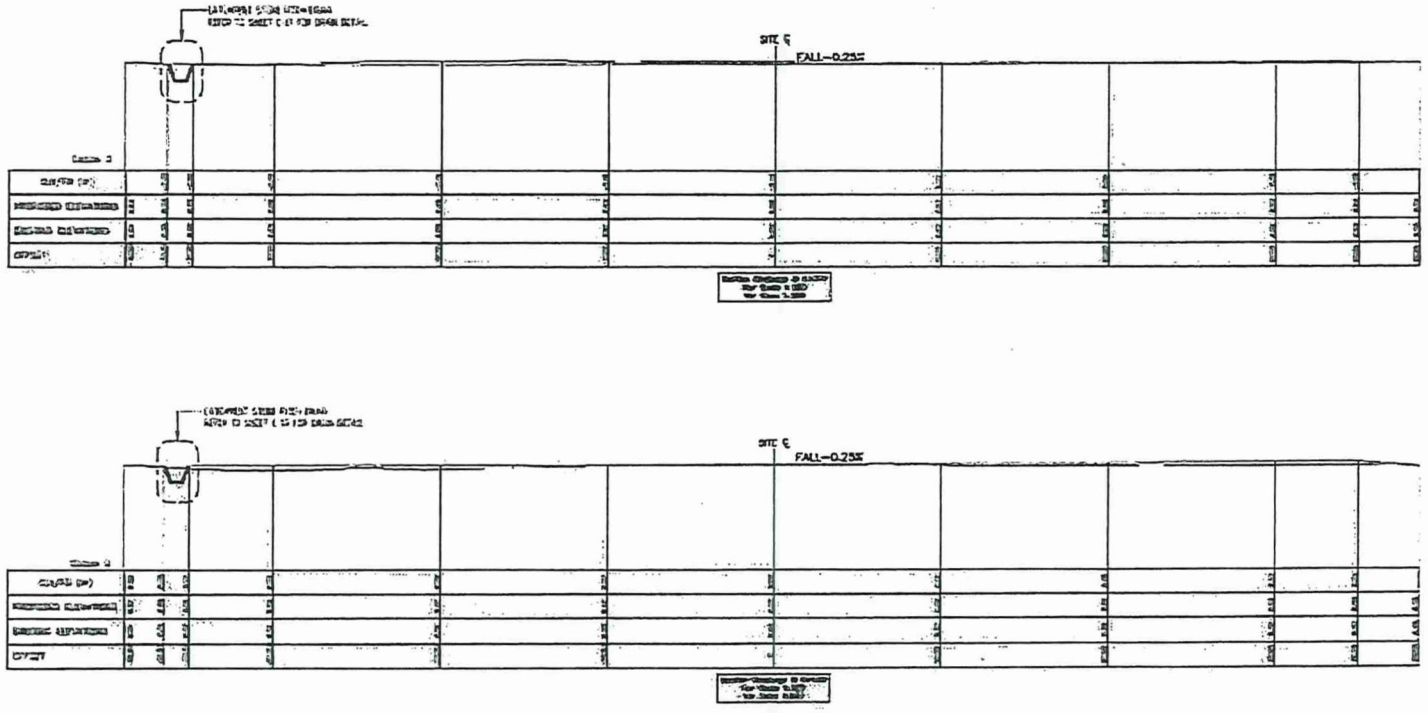

National Hosting Authority
2023 Pacific Games

ISSUE	DESCRIPTION	DATE
A	CONCEPT DRAFT	-/-/-

Client	NATIONAL HOSTING AUTHORITY
Project Title	[illegible] P. GAMES MEDICAL CLINIC.
Drawing Title	CLINIC SITE CROSS SECTION PROFILE

Issued Stamp

Drawn by: FJI	Checked: -
Approved: -	Scale: -
Project No. -	Plot Date: -
Sheet No. CCS-10	Issue No. -

2. CONSTRUCTION OF DRAINAGE SYSTEM

2.1 Introduction

This document outlines the Scope of Work for the design and construction of a comprehensive drainage system to manage stormwater runoff for the proposed SPG 2023 Medical Health Centre. The efficient management of stormwater is crucial to ensure the safety, functionality, and longevity of the PG2023 Medical Health Centre facility. This project aims to create a sustainable and robust drainage system that will effectively collect, convey, and safely discharge stormwater away from the PG2023 Medical Health Centre, minimizing the risk of flooding and water-related damage.

The Scope of Work encompasses various stages, from preliminary assessments and design to construction by adhering to this Scope, we will deliver a tailored drainage solution that addresses the specific challenges posed by stormwater runoff in the proposed PG2023 Medical Health Centre's location. This document serves as a roadmap for all stakeholders involved in the project, outlining the tasks, responsibilities, and deliverables required to achieve successful stormwater management for the PG2023 Medical Health Centre.

2.2 Site Locality

Location: The alignment of the drain is indicated in yellow below. The location is in the Burns Creek/ SDA compound.

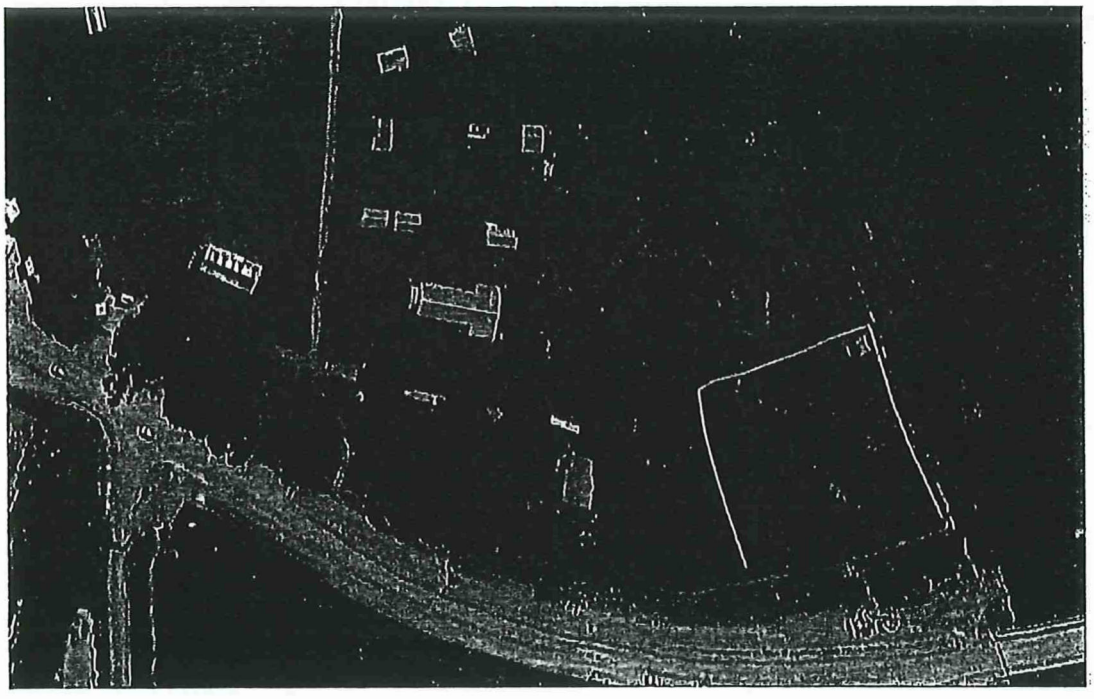

2.3 Project Objectives

The primary objectives of this project are as follows:

a. Stormwater Capture: Develop a drainage system capable of effectively capturing stormwater runoff from the PG2023 Medical Health Centre and its surrounding areas.

c. Place and consolidate reinforced concrete in the formwork to create a durable and smooth lining. See drawings for detail.

d. Cure the concrete lining to ensure proper strength development.

2.4.5 Road crossings construction

a. Construct 2 x road crossings. Culvert crossing and concrete cast in-situ with 25MPa. See the drawing for details and seek the Site Engineer for advice.

2.4.6 Site Clean-up

a. Remove any excess soil, debris, or construction waste from the site once the works are completed.

b. Restore the surrounding area to its original condition or as specified by the work done.

c. Dispose of waste materials in accordance with HCC regulations.

2.4.7 Final Inspection and Testing

a. Conduct a comprehensive inspection of the completed concrete-lined drainage system.

b. Test the system's functionality and water flow to ensure efficient drainage.

c. Obtain NHA's approval for the completed work.

2.4.8 Project Timeline

The project is expected to take approximately **1 month** from the start date to completion. However, the timeline is subject to change based on weather conditions and any unforeseen circumstances.

2.4.9 Project Cost

The proposed cost for the project is provided in the BoQ (refer to *Section VII, Annex IV – Contractor's Priced Bill of Quantities)*. This cost includes all materials, labor, and equipment required for the project. Any additional costs that may arise due to changes in the scope of work will be discussed and approved by the NHA before proceeding.

2.4.10 Conclusion

The completion of the drainage system Scope of Work for the proposed PG2023 Medical Health Centre Stormwater project marks a significant milestone in ensuring the facility's resilience and sustainability. Through planning, design, and construction, we have developed a comprehensive solution that efficiently manages stormwater runoff, safeguarding the PG2023 Medical Health Centre from potential flooding, erosion, and water-related damage. The scope of work ensures the safety and functionality of the SPG 2023 PG2023 Medical Health Centre while effectively managing stormwater.

By adhering to the defined Scope of Work, we have created a tailored drainage system that addresses the unique challenges presented by the PG2023 Medical Health Centre's location and also delivers a reliable drainage system that aligns with the PG2023 Medical Health Centre's needs and contributes to a safe and sustainable healthcare environment.

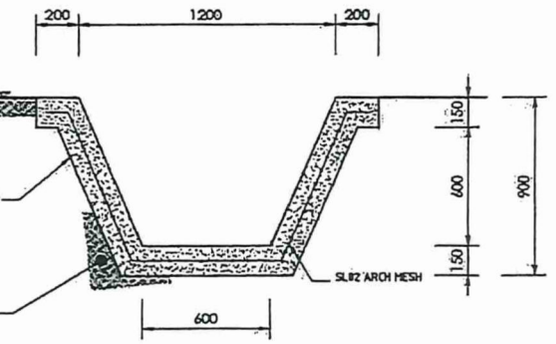

LINE DRAIN TYPE 'A'

1:20 @ A3

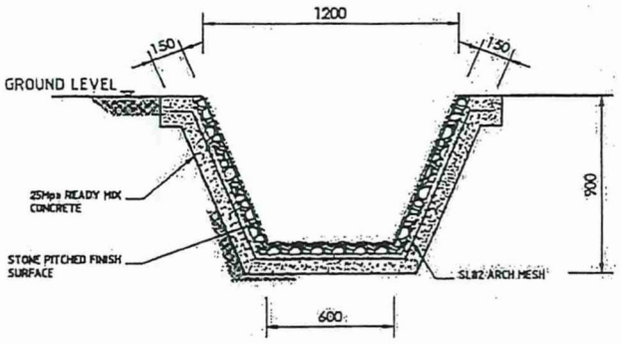

STONE PITCHED DRAIN

1:20 @ A3

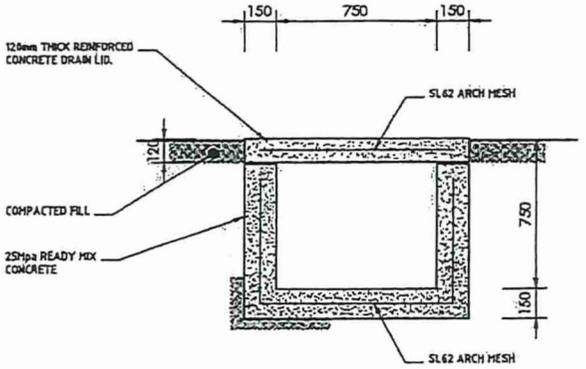

LINE DRAIN TYPE - 'U'

1:20 @ A3

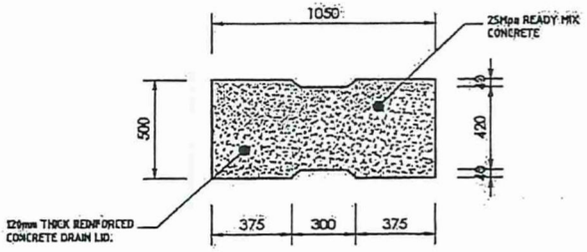

U-DRAIN LID PLAN

1:20 @ A3

National Hosting Authority
2023 Pacific Games

All Architectural, Structural, Civil, Hydraulics and Landscape drawings shall remains the sole property of the owner and are not to be duplicate or copied without written permission.

ISSUE	DESCRIPTION	DATE
A	CONCEPT DRAFT	-/-/-

NOTE:
DRAIN SPECIFICATION TO BE CONFIRM BY PROJECT ENGINEER

PROJECT TITLE:
SOL2023, IF, GAMES CLINIC DRAINAGE

DRAWING TITLE:
TYPICAL DETAILS - LINE DRAINS

CLIENT:
National Hosting Authority

ISSUE STAMP:

DRAWN. D.P	CHECKED. C.M
APPROVED. -	SCALE. 1:20 @A3
PROJECT No. -	PLOT DATE. 8/7/23
SHEET No. 01	ISSUE No. A

3.1.2 Specific Safety Requirements

The Contractor must, to a minimum, comply with the following:

Equipment	The Contractor is to nominate the equipment to be used on site. A detailed equipment list is to be submitted as part of the Contractors tender submission. All equipment is to be in safe and working order and must all have current licenses where appropriate. Vehicles are to be operated by qualified or adequately trained personnel.
Ladders	Must be available on site and in good condition and fit for industrial use.
Scaffold	Must be in good condition and adequately assembled by trained personnel
Power Tools	Tools on site must be serviced, in good condition and adequate for the task/job carried out.
Electricity	Any Works that involve the use of electricity, including temporary power during Works, is to be carried out be a suitably trained and certified electrician.
Fencing	Contractor is to separate construction area from general public areas using fencing or barrier tape. The site should be a distinct isolated work area. All hazards such as open excavation also need to be clearly marked or fenced.
Signage	Contractor to erect appropriate warning signage at work site. A project signboard is to be installed at the site entry at the commencement of Works. Project sign board needs to be approved by Employer's representative prior to erection.
Storage	Materials are to be stored in an appropriate and safe manner; and in accordance with any relevant material safety data sheet (MSDS).
Waste	All waste is to be collected and moved to a location identified and approved by Employer's representative as a waste disposal area.
Ablution	The Contractor should provide adequate ablutions for all personnel or visitors on site. Ablutions must be cleaned on a regular basis to maintain adequate hygiene standards.
Access	Site must have a designated entry and exit point. The entry and exit point should be clearly signed and located to provide minimal disruption to the public.
Authorised Personnel	Only authorised personnel allowed on site – appropriate signage must be in place to communicate this.
Evacuation Plan	An emergency evacuation and management plan must be in place and made known to all on site.
Fire fighting	Fire extinguishers must always be available on site and positioned in areas for ease of access in emergency.
First Aid	A first aid kit must always be available on site. The Contractor is to ensure that at least two of the Contractor's personnel on site at any time are adequately trained and certified in First Aid.
Emergency Response	Emergency response (Police, Ambulance, Fire Brigade) numbers must be available and displayed on site in event of an emergency.

Project Meetings	Project Meetings should be held on a fortnightly basis during the contracted period of Works. Attendees should include representatives of the Contractor and Employer. Project meetings may also be held as required at the request of the Employer or the Contractor.
Project Reporting	The Contractor is to submit weekly and monthly project reports and summaries. These reports should detail to a minimum: • Project progress and timeline update • Key issues and blockages • Pending approvals • Safety summary • Quality summary • Equipment summary • Staff records • Photographic records • Project Finance update
Payment Claims	Payment Claims are to be presented to the Employer's Representative /Project Manager whenever work associated with a milestone payment has been completed. Proof of completion of the milestone in the form of a monthly site report showing the completed work and a statement from the Contractor must accompany the Payment Claim. Payment Claims will be reviewed by the Employer's representative/Project Manager for approval. Once approval has been provided the Contractor can submit an invoice for payment.
Work Hours	Work hours are generally to be 8.00am to 5.00pm Monday to Friday. Extended work hours can be requested by the Contractor and approval provided by the Employer's representative.

3.1.5 Earthworks

Earthworks include, but not limited to, all clearing and grubbing, excavation, trenching, shoring, backfilling, removal of spoil material and placement of fill material. All excavation is to be conducted in a safe manner using nominated equipment. All equipment used in excavation is to be nominated in the Contractor's Safe Work Method Statement.

All excavation related activities on site are to be compliant with design documentation and approved by the Employer's representatives.

3.1.6 Clearing and Grubbing

Clearing and grubbing operations shall be carried out in the following areas as relevant:

- Areas where general Earthworks are to be constructed, plus a margin of 3m or to property boundaries; whichever is the lesser.
- Areas specified for visibility.
- Other areas as indicated on the drawings.

3.1.14 Service trenches

a. Excavation

If practicable, make trenches straight between manholes, inspection points and junctions, with vertical sides and uniform grades.

b. Trench widths

Keep trench widths to the minimum consistent with the laying and bedding of the relevant service and construction of manholes and pits.

3.1.15 Backfilling

a. **General:** Backfill service trenches as soon as possible after laying the service. Place backfills in layers. Compact each layer to a density sufficient to minimise settlement.
b. **Backfill material:** Excavated spoil or well graded inorganic material with maximum particle size of 75 mm.
c. **Next to services:** Do not place any particles greater in size than 25 mm within 150 mm of services.
d. **Under-paved areas:** Coarse sand, controlled low strength material or fine crushed rock.

3.1.16 Shoring

The Contractor/local builder shall shore up as necessary and batter the faces of excavations. The stability of soil faces during excavation work will be entirely the responsibility of the Contractor who shall make good any damage which may occur as the result of soil failure.

Where excavations at different levels are adjacent, the sides of the lower excavations shall be supported in such a manner that the bearing capacity of the retained soil is not impaired.

ANNEX I: TENDER AWARD LETTER

PERFORMANCE SECURING DECLARATION

[to be filled in, signed and submitted by the awardee contractor within on or before the signing of the Contract]

Date:31/08/23

NAME OF CONTRACT: CONSTRUCTION OF ACCESS ROAD AND DRAINAGE SYSTEM AT BURNSCREEK FOR THE 2023 PG2023 MEDICAL HEALTH CENTRE

Contract Identification No:

To: National Hosting Authority

We, the undersigned, declare that:

1. We understand that, according to your conditions, the Contract must be supported by a Performance Securing Declaration, in lieu of Performance Security.

2. We accept that we shall be suspended from being eligible for tendering in any contract with the Employer for the period of 2 months, or longer, starting on date specified by the Purchaser, if we are in breach of our obligation(s) under the Contract, because we:

   (a) failed to complete all Works in accordance with the agreed completion date or agreed extended date of completion; or

   (b) failed to perform these Works in accordance with the technical specifications and quality standards specified therein.

3. We understand this Performance Securing Declaration shall be rendered ineffective and unenforceable upon our receipt of the Certificate of Completion signed and issued by the Employer.

Signed ..... In the Capacity of *Managing Director*

Name: **Mr. Roland Piko**

Duly authorised to sign the Contract for and on behalf of **Ropiko Enterprises Ltd**

Dated on ..... *31st*... day of.....August.....2023

ANNEX V: CONTRACTOR'S INSURANCE CERTIFICATE

ANNEX VII: CONTRACTOR'S COMPANY HAUS CERTIFICATE

ANNEX IX: CONTRACTOR'S WORK SCHEDULE

NATIONAL HOSTING AUTHORITY
XVII 2023 PACIFIC GAMES

MEMORUNDUM

Date:6/9/23

To: To: Dr Jimmie Rodgers
NHA Chair/Secretary to the Prime Minister
NHA/OPMC.

NATIONAL HOSTING AUTHORITY ..... N.H.A ..... date: 6/9/23
CHAIR
SOL2023 PACIFIC GAMES

Dear Chair-NHA/SPM,

SUBJECT: REQUEST FORMAL APPROVAL TO PROCEED WITH CONTRACT AND PAYMENT TO ROPIKO ENTERPRISE LTD $3,569,239.73 FOR CONSTRUCTION OF ROAD AND DRAINAGE FOR MEDICAL CLINIC AT BURNSCREEK.

I refer to the above, formal approval is required to proceed with payment for Ropiko Enterprise for the Construction of Road and Drainage at Burnscreek medical clinic facility. The Contractor had already progressed on site.

The original approved cost submitted by the Project Management Unit was $3,350,000.00, this amount was based on Procurement Plan and budget, however, additional value due to bit increase in scope of works and BoQ resulted with new contract value of $3,569,239.73.

Cost Changes summary Information.

Recommended Contractor	**Description of works**	**Budget Amount**	**Contractor/PMU agreed amount due to increase in scope and BoQ**	**Increase amount due to change of scope and BoQ**
Ropiko Enterprise Ltd	Construction of concrete Drainage and access road for games medical clinic at Burnscreek school	$3,350,000.00	$3,569,239.73	$219,239.73

NATIONAL HOSTING AUTHORITY
XVII 2023 PACIFIC GAMES

C/-P.O. Box 2443
Honiara
Solomon Islands

Phone:
677 7308800

Facebook page:
Sol2023 XVII Pacific Games

MEMORANDUM

To: Dr. Jimmie Rodgers
NHA Chair/Secretary to the Prime Minister
NHA/OPMC
Date: _____

Thru: Christian Nieng
Executive Director, NHA
Approved Date: 29/8/23

Leeroy Bird
Executive Director, PMU
Date: 29/08/23

NATIONAL HOSTING AUTHORITY EXECUTIVE DIRECTOR SOL2023 PACIFIC GAMES

NHA Ref: **SVG-280823**

Date: Monday 28th August 2023

SUBJECT: APPROVAL OF BUDGET AND AWARD & CONTRACT SIGNING FOR THE CONSTRUCTION OF ACCESS ROAD & DRAINAGE SYSTEM TO RECOMMENDED CONTRACTOR ROPIKO ENTERPRISES LTD

Dear Chair, NHA/SPM,

Referring to the above matter, your approval is hereby required for the following regarding the above matter, i.e., Construction of Access Road and Drainage System for the Medical Clinic Project:

1. Approval of the Budget for the Works as per Costings quoted by the Contractor and verified by PMU's QS
2. Approval to proceed with Award and Contract Signing

The total Cost for the Works (Access Road Construction & Drainage System combined) is **SBD $3,569,239.73.**

The recommended Contractor for the Works is **Ropiko Enterprises Ltd** as they are already on site (eliminate mobilization costs), having conducted the site clearance and backfill/earthworks as per their arrangement with SDA Mission and NHA. Furthermore, they are reliable and have the capacity to deliver these works within the restricted timeframe put forward.

As per discussion had with ED PMU, it was stated that prior approval for waiver of the competitive process and initial budget was already approved.

Attached also, are the following documents:

1. Request for Quotation
2. Scope of Works
3. Bill of Quantities (costed by the Contractor and verified by PMU's QS)

Hence, we now seek your approval for the confirmed budget for the Works stated above and to proceed with award and contract signing for the recommended Contractor, Ropiko Enterprises Ltd.

Sincerely,

Soleana Gagahe
Contracts Manager, PMU

cc. FC
Procurement, Contracts & Compliance Manager, NHA

The second is my approval memo – also already signed.

However:
First print and sign your memo then pdf it for distribution.

Thanks

Chair / SPM

Sent from Mail for Windows

DECISION BY THE NHA CHAIR FOR WAIVER AND TO SOLE SOURCE THE CONTRACTOR FOR THE ACCESS ROAD AND DRAINAGE FOR THE POLY CLINIC SITE FOR PG2023

National Hosting Authority

Ref: NHA Chair NHA/10-23 Date: 8 August 2023

APPROVAL FOR WAIVER AND TO SOLE SOURCE THE CONTRACTOR FOR THE ACCESS ROAD AND DRAINAGE FOR THE POLY CLINIC SITE FOR PG2023

An urgent request was submitted to the NHA Chair to consider and approve (i) a waiver of our normal procurement processes for the construction of the access road and drainage for the new Poly clinic site for PG2-023 and also to (ii) approve to sole-source and award the contract to Ropiko Enterprises to construct the access road and drainage for the new poly clinic at an estimated cost of $3,350,000,

By way of a background, the PG2023 Health Centre has been on hold for almost two years since the bilateral agreement signed between ROI and SIG. Neither of the parties are at fault. The cause of the delay was inability to secure land for the poly clinic.
Firstly, negotiations with SINU over a protracted period of over 18 months did not result in securing the two preferred locations on the roadside of the Friendship hall and on the opposite side close to the dormitories for CCECC, No consensus could be reached in terms of the site to construct the clinic.

Secondly, with approval of the Permanent Secretary of the Ministry of Education the site immediately west of the East-end sports field was approved. However, after the groundbreaking ceremony, KGVI School refused to allow the land for the clinic construction,

Finally, the Seventh Day Adventist Church offered their land at the Burns Creek School opposite the Maranatha Hall for the site in exchange for the Poly Clinic to be transferred to the Church after the 2023 Pacific Games.

The agreement for the use of the land was only secured in early June 2023 giving the NHA less than four months to construct the Poly Clinic.

This site while not too far from the main games venue has a more difficult access and will cost the NHA in the order of 6 – 7 million dollars extra to do access road,

construct drainage, undertake Geotech and UXO clearance, and prepare the land for building.

Mr Ropiko of Ropiko Enterprises agreed with the SDA Church to undertake the initial civil works on the site free of charge.

The NHA is responsible for the construction of the access road, and all works to ensure the Poly Clinic is built and operational before the games.

With all the formalities finally achieved, works need to commence as soon as possible if we are to meet the timeframe of completion by 15th October 2023, a bare four weeks before the games. Some of the major works required are as follows:

1. Supply and Install Building- ProDesigners Builders are the ROI selected contractor
2. Site Clearance- done for free by Ropiko Enterprise on behalf of SDA Mission
3. Cut and fill, grading, compacting- done for free by Ropiko on behalf of SDA Mission
4. Foundation/footing- pending
5. Car Park- pending
6. Fencing- pending
7. Drainage- pending
8. Access road- pending
9. Septic & Soak Pit- PBL ready to start

Due to the very limited timeframe remaining, the Project Management Unit have deemed it necessary to request a bid waiver and to sole source the construction of the road access and drainage to Ropiko Enterprises who had already undertake site clearance civil works on behalf of the church. This request is made on the basis that:

1. Ropiko Enterprise is a fully qualified civil contractor with years of experience in the industry and a good track record with NHA civil works as well
2. Ropiko Enterprises has saved the NHA hundreds of thousands of dollars by carrying out site clearance, grading, filling and compacting of the site pro-bono on behalf of the SDA Mission.
3. RE is already familiar with the site, he is a member of the SDA leadership and will work well with the landlords on the site
4. Since they are doing these works mentioned above, their machineries are still on site and readily available to start works.
5. Most importantly, we only have 3 months to complete the full works hence there is no time now to go for competitive tender.

Based on the high-level costs done, the total cost for the access road and drainage works sits at a combined cost of $3,350,000.00SBD. However, should this bid waiver be approved, the contractor will be requested to quote of which this approval shall also grant the PMU the opportunity to negotiate costs with the contractor in the event their total costs exceed this high-level estimate.

NHA Chair Comments

The submission, analysis, and recommendations in the proposal are justified.

The clinic must be completed and operational no later than 15 October 2023. Construction and assembly of the clinic must therefore start with immediate effect.

This means the construction of the access road and drainage must take effect simultaneously.

The recommendation to seek a waiver and to sole source Ropiko enterprises on the basis they are qualified, had been one of the contractors enlisted by NHA for pervious work, and had been a reliable contractor, and has also done hundreds' of thousand dollars' worth of civil works pro-bono to clear the site is justified.

NHA Chair Decision

The Chair of NHA having considered the analysis and recommendation:

1. *Agrees to the bid waiver as requested, and*
2. *Approve the Sole sourcing of Ropiko Enterprises to undertake the scope of work outlined in this project up to a total value of $3,350,000.*

The chair further directs PMU to negotiate with the contractor to see if the amount payable can be reduced.

This approval is to be tabled at the next full meeting of the GTB for its noting and endorsement.

Dated this 8th day of August 2023

Dr. Jimmie Rodgers
NHA Chair
Secretary to Prime Minister

PACIFIC GAMES
SOLOMON ISLANDS

2023 PACIFIC GAMES OFFICE

Approval /Signature Required

Supplier Name: Ropiko Enterprise Ltd -10% Final Payment after DLP.

1) Minute	☑	Sign by ED			
2) Requisition	☑	Compliance Officer		Sign by ED	
3) Payment Voucher	☑	Sign by FC		Sign by ED	
4) LPO	☐	Sign by FC		Sign by ED	
5) IB Authorisations	☑	Sign by FC		Sign by ED	

Comments:

12/03/24

Transaction or Request Lodgement Receipt

Transaction or Request Description:	ANZ to Other Bank Transfer
Transaction or Request Status:	Posted
Date / Time:	08/03/2024 14:36
Transaction Number:	AHX09805

Transaction Details:

ANZ to Other Bank Transfer

From Account: 5691140
Transfer Amount in Local Currency: SBD 330,154.67
Transfer From Amount: SBD 330,154.67
Indicative :
My Reference: Retention

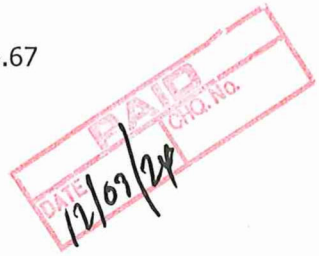

Payment Details

Account Name: Ropiko Enterprises Limited
Account Number: 20001341123014
Bank Name: Bred Bank
Reference To Payee : INV#74-Acc/Road

Pay Date : 08/03/2024

Comments:

* * * * * * * * * * Authorisation Details * * * * * * * * * *
08/03/2024 14:36 Pauline Tovua
Authorisation Required for : ANZ to Other Bank Transfer (2A)
08/03/2024 15:33 Christian Nieng
Authorised -ANZ to Other Bank Transfer
Comments : Verified
12/03/2024 17:09 Debbie Ofaeri Sifoni
Authorised -ANZ to Other Bank Transfer
12/03/2024 17:09 Debbie Ofaeri Sifoni
Transaction Processed
* *

©Copyright Australia and New Zealand Banking Group Limited ABN 11 005 375 522, 1996-2024. ANZ's colour blue is a trade mark of ANZ.

Your Reference

*** Important Information displayed on ANZ Internet Banking screen is not shown on this printout**

Held for Authorisation
Transaction Number AHX09805

Transaction Details

ANZ to Other Bank Transfer

From Account: 5691140
Transfer Amount in Local Currency: SBD 330,154.67
Transfer From Amount: SBD 330,154.67
Indicative :
My Reference: Retention

Payment Details

You can view the status and details of your transactions and requests for the last 12 months via ANZ Internet Banking.

8/3/24

NATIONAL HOSTING AUTHORITY
P O Box 2443
Honiara, Solomon Islands
E:Accounts@sol2023.com.sb

PAYMENT VOUCHER	
DATE	7/03/2024

ROPIKO ENTERPRISE LTD
Honiara
Solomon Islands

Cheque Number IB TRANS

Total Amount Paid $330,154.67

Final Payment No.04 (10%) for Construction of Access Road and Drainage System at Burnscreek for Medical Health Centre for PG2023.

In Payment For the following invoices:

Supplier Inv	Purchase No.	Invoice Date	Invoice Amount	Previous Payments	Current Payment
	00001724	7/09/2023	$3,301,546.75	$2,971,392.08	$330,154.67

NATIONAL HOSTING AUTHORITY
FINANCIAL CONTROLLER
SOL2023 PACFIC GAMES

8/3/24

Payment Voucher Prepared By: _____ Date: 7/03/24

Signature of Claimant: _____

PRINT NAME: _____

PAYMENT SCHEDULE

COMSTRUCTION OF ACCESS ROAD AND DRAINAGE SYSTEM AT BURNSCREEK FOR MEDICAL HEALTH CENTRE PG2023

ROPIKO ENTERPRISES LIMITED

Payment No.	DATE		Award Amount	Retention 5%	With Holding Tax 7.5%	Amount Paid	Status
			3,569,239.73				
No.1	7/09/2023	50%	1,784,619.87		133,846.49	1,650,773.38	Paid
No.2	8/11/2023	20%	713,847.95		53,538.60	660,309.35	Paid
No.3	12/01/2024	20%	713,847.95		53,538.60	660,309.35	Paid
No.4	7/03/2024	10%	356,923.97		26,769.30	330,154.68	Payment in Progress
					-	-	
TOTAL			***3,569,239.73***	-	***267,692.98***	***3,301,546.75***	

NATIONAL HOSTING AUTHORITY

REQUISITION NUMBER: PMU - 1347/24

DEPARTMENT: PMU

PURCHASE REQUISITION

QUANTITY	UNIT	DESCRIPTION (Full and clear details of payment)	PURCHASING OFFICER USE ONLY		
			SUPPLIER	ORDER NO.	COST
1	L.S	Payment 4 - 10% Retention Payment for Completion of DLP for Construction of Access Road & Drainage System for PG 2023 Health Centre, Burnscreek	Rojiko Enterprises Limited	INV#74	$356,923.97
				TOTALS	$356,923.97

Approval is requested to incur expenditure on the above

Estimated Cost (SBD): $356,923.97 Date: 01/03/24

Requisition Officer (Name): SOLEANA G Sign:

Account Code: G-2717

Account Name: Other Local Other Cost.

Funds available on this account:

Supervisors Certification (Accountable Officers):

Certifying Officer (Name): LEEROY BIRD Sign:

Post: ED PMU

Department: PMU

Authority is granted for expenditure not exceeding:

SBD$ 356,923.97

Signed:

Name:

Note: Authority for expenditure must be given by accounting officer or his/her deligated

Threshold Checklist

Payment requires one quote (10,000 below)	
Payment requires three quotes ($10,000.00 above)	
Is it a ITB Contract Payment	
Is it a GTB Contract Payment	
Payment is a Bid Waiver	

Compliance Check by: Signature

Name: Tumeu B. Date: 06/03/24

Position: P.C.O

Copy 1 White NHA Finance

Copy 2 Pink Compliance Department

Copy 3 Yellow Requesting Department

NATIONAL HOSTING AUTHORITY

REQUISITION NUMBER: PMU - 1347/24

DEPARTMENT: PMU

PURCHASE REQUISITION

QUANTITY	UNIT	DESCRIPTION (Full and clear details of payment)	PURCHASING OFFICER USE ONLY: SUPPLIER	ORDER NO.	COST
1	L.S	Payment 4 - 10% Retention Payment for Completion of DLP for Construction of Access Road & Drainage System for PG 2023 Health Centre, Burnecreek	Ropiko Enterprises Limited	INV# 74	$ 356,923.97
				TOTALS	$356,923.97

Approval is requested to incur expenditure on the above

Estimated Cost (SBD): $356,923.97 Date: 01/03/24

Requisition Officer (Name): SOLEANNA G Sign:

Account Code: 6.2717 Other Local Other Cap

Account Name:

Funds available on this account:

Supervisors Certification (Accountable Officers):

Certifying Officer (Name): LEEROY BIRD Sign:

Post: ED PMU

Department: PMU

Authority is granted for expenditure not exceeding:

SBD$ 356,923.97

Signed:

Name:

Note: Authority for expenditure must be given by accounting officer or his/her deligated

Threshold Checklist

Payment requires one quote (10,000 below)	
Payment requires three quotes ($10,000.00 above)	
Is it a ITB Contract Payment	
Is it a GTB Contract Payment	
Payment is a Bid Waiver	

Compliance Check by: Signature

Name: Junior B. Date: 6/03/24

Position: P.C.O

Copy 1 White NHA Finance

Copy 2 Pink Compliance Department

Copy 3 Yellow Requesting Department

NATIONAL HOSTING AUTHORITY
XVII 2023 PACIFIC GAMES

MEMORANDUM

To: Executive Director, NHA 1/3/24

Thru: ~~Executive Director, PMU~~ 1/03/24

From: Cora Sita Makini, PMU

Ref: CSM - 060224

Date: Tuesday 6th February 2024

SUBJECT: PAYMENT 4 APPROVAL FOR ROPIKO ENTERPRISES LIMITED FOR CONSTRUCTION OF ACCESS ROAD AND DRAINAGE SYSTEM FOR PG2023 HEALTH CENTRE, BURNSCREEK

Dear ED,

The PMU Team is **requesting approval for payment towards Ropiko Enterprises Limited for the construction of the access road and drainage system for the PG2023 Health Centre.** The payment is part of Payment No. 4 under Section IV: Payment Schedule, which covers 100% completion of total Works as per the Scope of Works.

The total amount rendered for 10% payment **THREE HUNDRED AND FIFTY-SIX THOUSAND, NINE HUNDRED AND TWENTY – THREE SOLOMON BOKOLO DOLLARS AND NINETY – SEVEN CENTS ($356,923.97).**

Please find attached the invoice, weekly site reports (Contractor), completion report, payment certificate, approval of the selected Contractor, contract and Addendum No. 1 to the Contract.

We kindly seek your urgent approval.

Yours sincerely,

Cora Sita Makini
Project Manager, PMU

C/-P.O. Box 2443
Honiara
Solomon Islands

Phone:
677 7308800

Facebook page:
Sol2023 XVII Pacific Games

C5

NATIONAL HOSTING AUTHORITY
SOLOMON ISLANDS GOVERNMENT

CONTRACT PAYMENT AND COMPLIANCE CHECKLIST
(For payment of contracts over $100,000)

This checklist is to be submitted along with contracts payments for works, goods and services

Required documents Prepared by Committee/Department	FI Ref	Committee (PMU)	Procurement	Finance
Purchase Requisition (PR) for the entire value of the contract	P7 35	✓		✓
Draft Contract **(~~not yet~~ signed by Supplier)**	P7 10.1	✓		✓
Tender Award by ITB/GTB	P7 10.1	N/A		
PR signed by requisition officer		✓		✓
Vendor Information Form (for new vendor)				
ICT Checklist attached (if for ICT equipment)				
Progress Report of works/Photos etc				
Completion report if goods/services and works have been completed		✓		✓
Other reports if any (goods and services)				
Payment certificate from Engineer matching amount in Requisition		✓		✓
Invoice from Contractor matching amount in requisition		✓		✓
Compliance checks required and done by Procurement				
Contract form approved and Signed by Chairman/EDs	P7 27.2		✓	✓
PR has been signed by authorized person (and not approving payment to themselves)	P7 44		✓	✓
Check amount on PR matches the signed contract				✓
Account code used is correct	P7 38.5(e)		✓	✓
Name on PR matches signed contract	P7 38.5(e)		✓	✓
Check price and rates are reasonable	P7 43.2(b)			
Data entry checks for PV and Cheque payments done by Finance Department				
Amount entered in AX matches Requisition				✓
Account code in AX matches Requisition				✓
Vendor name in AX matches Requisition				✓
Item code and Units entered (e.g. box, each) correctly				✓
Description has enough detail				✓
Check dates on future instalments entered correctly				✓
Budget OK				✓

Note: If any of the above is not able to be certified please include an explanation of why. This will speed up the compliance process.

Department Compliance performed by:

Signed: _____

Name and Position: Graham Lilo - PM

Date: 04/03/24

Procurement section Compliance performed by:

Signed: _____

Name and Position: Tumau Buri P.C.O.

Date: 06/03/24

Finance Department Compliance performed by:

Signed: _____

Name and Position: N. Vular (F/O)

Date: 07/03/24

ROPIKO ENTERPRISES LIMITED
P.O.BOX 1817, Honiara.
SOLOMON ISLANDS.
Ph No: 677 28065 & 28066

Invoice No. 74

INVOICE

Customer

Name	National Hosting Authority
Address	P.O.Box 2443
City	Honiara State Vanual ZIP
Phone	+677 42100

Misc

Date	02.02.2024
Order No.	
Rep	
FOB	

Qty	Description	Unit Price	TOTAL
1	Being for 10% Payment for the Project of Construction of Access Road and Drainage System at Burnscreek for PG2023 Medical Health Centre	$ 356,923.97	$ 356,923.97
	Bank Name: Australia New Zealand (ANZ) Bank		
	Account Name: Ropiko Enterprises Limited		
	Account Number: 4369199		

SubTotal		$ 356,923.97
Shipping		$ -
Tax Rate(s)	0.00%	$ -
TOTAL		$ 356,923.97

Payment Select One...

Comments
Name Ropiko Enterprises Limited
CC #
Expires

Office Use Only

P.O. BOX 2443 Sea King Restaurant Building, Honiara, Solomon Islands

PROGRESS PAYMENT CERTIFICATE NO: 04

Payment Schedule Name:	Payment No. 4		
Project Name:	Construction of Access Road and Drainage System at Burnscreekfor the 2023 PG2023 Medical Health Centre		
Contractor:	Ropiko Enterprises Limited		
Project Manager	Cora Sita Makini	**Certificate:**	PC - 04
Contract Administrator:		**Date Invoice Received:**	5-Feb-24
		Date Issued for payment:	16-Feb-24
		Contract No:	N/A

A PROGRESS CLAIM SUMMARY

REF	PROGRESS CLAIMS	CONTRACT DETAILS	PAYMENT DETAILS	NOTES
	Contract Value	$ 3,569,239.73		
1	Payment 1 (50%) - Mobilisation made upon Contracor's mobilisation to site, site clearance and commencement of works	$ 1,784,619.87	$ 1,784,619.87	Issued for payment
2	Payment 2 (20%) - completion of 50% of works as per the Scope of Works	$ 713,847.946	$ 713,847.946	Issued for payment
3	Payment 3 (20%) - completion of remaining works for access road	$ 713,847.946	$ 713,847.946	Issued for payment
4	Payment 4 (10%) - defects liability period	$ 356,923.97	$ 356,923.97	Issued in this claim
5	**Progress Claim to date**	**$ 3,569,239.73**		
6	**Original Contract Value**	**$ 3,569,239.73**		
7	**Total Adjusted Contract Value**	**$ 3,569,239.73**		
8	**Balance of Contract Payment**	**-$ 0.00**		

B PAYMENT DETAILS

	Progress payment for this claim	$ 3,569,239.73	
	Retention-Purchaser retains 5% of this payment pursuant to clause	$ -	
	Amount payable for this claim after Retention	$ 3,569,239.73	

Payment is certified as conform to payments terms and conditions as stated in article 10:

Payment is hereby certified: ..... *Cora Sita Makini (Project Manager)* 16/02/24 *Date*

Compliance and approved by: ..... *Soleana Gagahe (Contract Administrator)* 01/03/24 *Date*

Claim is hereby approved for payment by: .....

Leeroy Bird Executive Director - PMU

1/3/24
...../...../.....
Date

On presentation of this original to the Employer, the Contractor is entitled to payment within the period stated in the Agreement: Article 10.

PROJECT MANAGEMENT UNIT
NATIONAL HOSTING AUTHORITY

Certificate of Final Completion

(Defects Period Lapse)

Date: 20/02/2024

Contract Name: **Construction of Access Road and Drainage System at Burnscreek for the 2023 PG2023 Medical Health Centre**

Contract No: N/A

Defects Period: 1 Month

Date of Issuance of Practical Completion: 17/01/2024

Name of Contractor: **Ropiko Enterprises Ltd**

The works performed under this contract has been inspected by the authorized Project Manager representing Project Management Unit of National Hosting Authority for the Contract mentioned as the construction of access road and drainage system at Burnscreek for the 2023 PG2023 Health Centre.

The access road and drainage system is to supplement the health centre's operations and longevity; and is hereby declared to be complete final on this date of 20/02/2024. The list of items associated with the certificate of substantial completion have been satisfactorily completed.

Project Management Unit of National Hosting Authority hereby accepts final completion with a lapse of defects period.

Cora Makini
Project Manager

Soleana Gagahe
Contracts Manager

Leeroy Bird
Executive Director

PROJECT MANAGEMENT UNIT
NATIONAL HOSTING AUTHORITY

Certificate of Final Completion

Contractor hereby accepts construction project as finally complete

.....	.....
Engineer	**Project Manager**
Ropiko Enterprises Ltd	**Ropiko Enterprises Ltd**

Defect List

Project Name:	Construction of Access of Road and Drainage System at Bursncreek for the 2023 PG2023 Medical Health Centre	**Actual date of DLP Lapses:**	17th December 2023 to 17th January 2024 (1 Month)
Project Manager:	Cora Makini	**Project Site:**	Burnscreek
Project Site Engineer	Rowena Toito'ona	**Contractor:**	Ropiko Enterprises Ltd

Defect No.	Defect Description	Rectification works required	Expected Defects rectification Completion – insert # of days required to complete defect
1	N/A – NO DEFECTS	N/A – NO DEFECTS	N/A – NO DEFECTS
2			
3			

In lieu of the Contract terms and conditions for which these defects shall be rectified, the Contractor is hereby required to properly complete the works as required prior to retention payment released as required.

Issuance of this notice in conformity with the Contract by the Project Manager:.....date: 16/02/24

Counter Signed by the Contracts Manager.....Date: 16/02/24

PROJECT MANAGEMENT UNIT
NATIONAL HOSTING AUTHORITY

Date:25/01/2024

DEFECTS COMPLETION REPORT CERTIFICATE

To: **Ropiko Enterprises Ltd** *(The Contractor)*	**To:** **National Hosting Authority** *(The Employer)*
Contact person: Mr. Roland Piko	**Contact person: Leeroy Bird**
Address: **Roland Piko** **Ropiko Enterprises Ltd** **P.O Box 1817** **Honiara, SI**	**Address:** **National Hosting Authority** **Sports City** **P.O. Box 2443** **Honiara, SI**
Telephone: +677 71 03932	**Telephone: +677 78 49476**

Contract no: N/A
Contract title: Construction of Access Road and Drainage System at Burnscreek for the 2023 PG2023 Health Centre

DEFECTS CERTIFICATE			
	day	**month**	**year**
Completion achieved on:	**17**	**12**	**2023**
The end of the last *defects correction period* is:	**17**	**01**	**2024**
The *defects date* is:	**-**	**-**	**-**
This Defects Certificate Date is: (at the later of the *defects date* or the end of the last *defects correction period*)	**20**	**02**	**2024**

Defect reference	**List of Defects modified before the *defects date* which the *Contractor* has not corrected** (or if there are no such Defects, a statement that there are none.)
	No defects encountered during the Defects Liability Period

Works checked and certified by the Project Manager:

_____	Cora Makini	25/01/2024
Signature:	*Name:*	*Date:*

Final Approval Certificate

It is hereby certified that in accordance with the provisions of the General Conditions of Contract, that the above-mentioned works have been completed and all defects have been corrected in accordance with the provisions of the Contract.

Certified by the Executive Director:

.....	.....	1/03/24
Signature:	*Name:*	*Date:*

6th February 2024
Completion_Report.docx

NHA Ref: CSM-060224

Mr. Leeroy Bird
Executive Director
Project Management Unit
Games Facilities Committee
National Hosting Authority
Old Sea King Building, Point Cruz, Honiara, Guadalcanal
SOLOMON ISLANDS

To Mr. Leeroy BIRD,

PROJECT: **10 MEDICAL CLINIC**
SUBJECT: **COMPLETION REPORT FOR CONSTRUCTION OF ACCESS ROAD AND STORM WATER DRAIN AT BURSNCREEK FOR PG2023 HEALTH CENTRE**

1 INTRODUCTION

1.1 This report is to supplement Ropiko Enterprises Ltd report and invoice for Payment No.4 (10%) of the construction of the access road and storm water drain for the PG2023 Health Centre.

1.2 The Contractor's payment schedule was revised to cover the remaining works that are now complete. Therefore, this is the final payment.

1.3 Refer to the attached for Addendum No.1.

2 PROGRESS TO DATE

2.1 Below shows a summary of the works completed to supplement Ropiko Enterprises Ltd claim:

Date	Works Completed	Photos

1.	• Landscaping - installation of vegetative barrier along (west to east) the access road • The works included installation of a flower bed with vegetation that has well-established roots to combat storm water runoff and scouring from river gravel onto the access road • The backfill of river gravel complete	  

3 PHOTOS OF WORKS

3.1 Tabulated in Section 2 Progress to Date.

4 CONCLUSION

4.1 The Contractor has fulfilled the milestones set in Payment Schedule: Payment 4 for completion of the access road, which included the vegetative barrier.

4.2 With this, the Contractor is entitled to Payment 4 at 10% payment.

Yours faithfully,

CORA SITA MAKINI
Project Manager
Project Management Unit
Games Facilities Committee
National Hosting Authority
7234094

ROPIKO ENTERPRISES LIMITED

Weekly Construction Report

Project Title:	Construction of Access Road and Drainage System at Burns creek For The Pacific Games 2023 Medical Health Centre – Contract No:

Date:	13th to 17th Dec 2023	Day:	Wednesday to Sunday.	Report No:	11

Workmen:

Personnel	Male	Female	Major Equipment on site	
Names	No.	No.	Equipment	No.
Project Manager	1		Excavator	
Supervisor			Loader	
Foremen			Drum Roller	
Leading hand			Dump Trucks	1
Carpenter			Motor Grader	1
Plumber			Backhoe	
Electrician			Mixer Truck	
Welder			Service Truck	1
Machine Operator	1			
Truck Driver	1			
General Labourer (Skilled/ Semi-Skilled)				
Others (List):				
Total	3			3

If others, provide description:

Visitors to the sites (Name, Title, Purpose):

No.	Name of person	Title of person	Purpose of visit
1.			
2.			

Safety:

	No.	Descriptions
Accident		None
Injury		None
Unusual Events		None

Progress of Works:

Activities and Material Deliveries

	Descriptions
Activities	1. Supply 170m3 of River Gravel. 13th December 2023.
	2. Spread and Grade River Gravel with Motor Grader. 17th December 2023.
	3. Landscaping works.
Material Deliveries	
	1. 170 cubic meter of River Gravels.

Meeting and Significant Decisions

None.....

.....

.....

.....

Unsolved Issues/ factors causing Delay.

- None.....

.....

.....

Project Manager: Mr Roland Piko .....

Signature

Photos:

















NATIONAL HOSTING AUTHORITY
XVII 2023 PACIFIC GAMES

MEMORUNDUM

Date:6/9/23

To: To: Dr Jimmie Rodgers
NHA Chair/Secretary to the Prime Minister
NHA/OPMC.

.....N.H.A..... date: 6/9/23

NATIONAL HOSTING AUTHORITY
CHAIR
SOL2023 PACIFIC GAMES

Dear Chair-NHA/SPM,

SUBJECT: REQUEST FORMAL APPROVAL TO PROCEED WITH CONTRACT AND PAYMENT TO ROPIKO ENTERPRISE LTD $3,569,239.73 FOR CONSTRUCTION OF ROAD AND DRAINAGE FOR MEDICAL CLINIC AT BURNSCREEK.

I refer to the above, formal approval is required to proceed with payment for Ropiko Enterprise for the Construction of Road and Drainage at Burnscreek medical clinic facility. The Contractor had already progressed on site.

The original approved cost submitted by the Project Management Unit was $3,350,000.00, this amount was based on Procurement Plan and budget, however, additional value due to bit increase in scope of works and BoQ resulted with new contract value of $3,569,239.73.

Cost Changes summary Information.

Recommended Contractor	**Description of works**	**Budget Amount**	**Contractor/PMU agreed amount due to increase in scope and BoQ**	**Increase amount due to change of scope and BoQ**
Ropiko Enterprise Ltd	Construction of concrete Drainage and access road for games medical clinic at Burnscreek school	$3,350,000.00	$3,569,239.73	$219,239.73

NATIONAL HOSTING AUTHORITY
XVII 2023 PACIFIC GAMES

MEMORANDUM

To: Dr. Jimmie Rodgers
NHA Chair/Secretary to the Prime Minister
NHA/OPMC

Date: _____

Thru: Christian Nieng
Executive Director, NHA

Approved Date: 29/8/23

Leeroy Birt
Executive Director, PMU

Date: 29/08/23

NATIONAL HOSTING AUTHORITY
EXECUTIVE DIRECTOR
SOL2023 PACIFIC GAMES

NHA Ref: **SVG-280823**

Date: Monday 28th August 2023

SUBJECT: APPROVAL OF BUDGET AND AWARD & CONTRACT SIGNING FOR THE CONSTRUCTION OF ACCESS ROAD & DRAINAGE SYSTEM TO RECOMMENDED CONTRACTOR ROPIKO ENTERPRISES LTD

Dear Chair, NHA/SPM,

Referring to the above matter, your approval is hereby required for the following regarding the above matter, i.e., Construction of Access Road and Drainage System for the Medical Clinic Project:

1. Approval of the Budget for the Works as per Costings quoted by the Contractor and verified by PMU's QS
2. Approval to proceed with Award and Contract Signing

The total Cost for the Works (Access Road Construction & Drainage System combined) is **SBD $3,569,239.73.**

The recommended Contractor for the Works is **Ropiko Enterprises Ltd** as they are already on site (eliminate mobilization costs), having conducted the site clearance and backfill/earthworks as per their arrangement with SDA Mission and NHA. Furthermore, they are reliable and have the capacity to deliver these works within the restricted timeframe put forward.

As per discussion had with ED PMU, it was stated that prior approval for waiver of the competitive process and initial budget was already approved.

Attached also, are the following documents:

1. Request for Quotation
2. Scope of Works
3. Bill of Quantities (costed by the Contractor and verified by PMU's QS)

Hence, we now seek your approval for the confirmed budget for the Works stated above and to proceed with award and contract signing for the recommended Contractor, Ropiko Enterprises Ltd.

Sincerely,

Soleana Gagahe
Contracts Manager, PMU

cc. FC
Procurement, Contracts & Compliance Manager, NHA

C/-P.O. Box 2443
Honiara
Solomon Islands

Phone:
677 7308800

Facebook page:
Sol2023 XVII Pacific Games

The second is my approval memo – also already signed.

However:
First print and sign your memo then pdf it for distribution.

Thanks

Chair / SPM

Sent from Mail for Windows

DECISION BY THE NHA CHAIR FOR WAIVER AND TO SOLE SOURCE THE CONTRACTOR FOR THE ACCESS ROAD AND DRAINAGE FOR THE POLY CLINIC SITE FOR PG2023

National Hosting Authority

Ref: NHA Chair NHA/10-23 Date: 8 August 2023

APPROVAL FOR WAIVER AND TO SOLE SOURCE THE CONTRACTOR FOR THE ACCESS ROAD AND DRAINAGE FOR THE POLY CLINIC SITE FOR PG2023

An urgent request was submitted to the NHA Chair to consider and approve (i) a waiver of our normal procurement processes for the construction of the access road and drainage for the new Poly clinic site for PG2-023 and also to (ii) approve to sole-source and award the contract to Ropiko Enterprises to construct the access road and drainage for the new poly clinic at an estimated cost of $3,350,000,

By way of a background, the PG2023 Health Centre has been on hold for almost two years since the bilateral agreement signed between ROI and SIG. Neither of the parties are at fault. The cause of the delay was inability to secure land for the poly clinic.
Firstly, negotiations with SINU over a protracted period of over 18 months did not result in securing the two preferred locations on the roadside of the Friendship hall and on the opposite side close to the dormitories for CCECC, No consensus could be reached in terms of the site to construct the clinic.

Secondly, with approval of the Permanent Secretary of the Ministry of Education the site immediately west of the East-end sports field was approved. However, after the groundbreaking ceremony, KGVI School refused to allow the land for the clinic construction,

Finally, the Seventh Day Adventist Church offered their land at the Burns Creek School opposite the Maranatha Hall for the site in exchange for the Poly Clinic to be transferred to the Church after the 2023 Pacific Games.

The agreement for the use of the land was only secured in early June 2023 giving the NHA less than four months to construct the Poly Clinic.

This site while not too far from the main games venue has a more difficult access and will cost the NHA in the order of 6 – 7 million dollars extra to do access road,

construct drainage, undertake Geotech and UXO clearance, and prepare the land for building.

Mr Ropiko of Ropiko Enterprises agreed with the SDA Church to undertake the initial civil works on the site free of charge.

The NHA is responsible for the construction of the access road, and all works to ensure the Poly Clinic is built and operational before the games.

With all the formalities finally achieved, works need to commence as soon as possible if we are to meet the timeframe of completion by 15th October 2023, a bare four weeks before the games. Some of the major works required are as follows:

1. Supply and Install Building- ProDesigners Builders are the ROI selected contractor
2. Site Clearance- done for free by Ropiko Enterprise on behalf of SDA Mission
3. Cut and fill, grading, compacting- done for free by Ropiko on behalf of SDA Mission
4. Foundation/footing- pending
5. Car Park- pending
6. Fencing- pending
7. Drainage- pending
8. Access road- pending
9. Septic & Soak Pit- PBL ready to start

Due to the very limited timeframe remaining, the Project Management Unit have deemed it necessary to request a bid waiver and to sole source the construction of the road access and drainage to Ropiko Enterprises who had already undertake site clearance civil works on behalf of the church. This request is made on the basis that:

1. Ropiko Enterprise is a fully qualified civil contractor with years of experience in the industry and a good track record with NHA civil works as well
2. Ropiko Enterprises has saved the NHA hundreds of thousands of dollars by carrying out site clearance, grading, filling and compacting of the site pro-bono on behalf of the SDA Mission.
3. RE is already familiar with the site, he is a member of the SDA leadership and will work well with the landlords on the site
4. Since they are doing these works mentioned above, their machineries are still on site and readily available to start works.
5. Most importantly, we only have 3 months to complete the full works hence there is no time now to go for competitive tender.

Based on the high-level costs done, the total cost for the access road and drainage works sits at a combined cost of $3,350,000.00SBD. However, should this bid waiver be approved, the contractor will be requested to quote of which this approval shall also grant the PMU the opportunity to negotiate costs with the contractor in the event their total costs exceed this high-level estimate.

NHA Chair Comments

The submission, analysis, and recommendations in the proposal are justified.

The clinic must be completed and operational no later than 15 October 2023. Construction and assembly of the clinic must therefore start with immediate effect.

This means the construction of the access road and drainage must take effect simultaneously.

The recommendation to seek a waiver and to sole source Ropiko enterprises on the basis they are qualified, had been one of the contractors enlisted by NHA for pervious work, and had been a reliable contractor, and has also done hundreds' of thousand dollars' worth of civil works pro-bono to clear the site is justified.

NHA Chair Decision

The Chair of NHA having considered the analysis and recommendation:

1. *Agrees to the bid waiver as requested, and*
2. *Approve the Sole sourcing of Ropiko Enterprises to undertake the scope of work outlined in this project up to a total value of $3,350,000.*

The chair further directs PMU to negotiate with the contractor to see if the amount payable can be reduced.

This approval is to be tabled at the next full meeting of the GTB for its noting and endorsement.

Dated this 8th day of August 2023

Dr. Jimmie Rodgers
NHA Chair
Secretary to Prime Minister

PACIFIC GAMES
SOLOMON ISLANDS

ADDENDUM NO. 1

ADDENDUM TO PAYMENT SCHEDULE OF THE CONTRACT

FOR

CONSTRUCTION OF ACESS ROAD AND DRAINAGE SYSTEM AT BURNSCREEK FOR THE PG2023 MEDICAL HEALTH CENTRE

between

NATIONAL HOSTING AUTHORITY

(Solomon Islands Government)

and

ROPIKO ENTERPRISES LIMITED

Issued 30th October 2023

PACIFIC GAMES
SOLOMON ISLANDS

ADDENDUM NO. 1

ADDENDUM TO PAYMENT SCHEDULE OF THE CONTRACT

FOR

CONSTRUCTION OF ACESS ROAD AND DRAINAGE SYSTEM AT BURNSCREEK FOR THE PG2023 MEDICAL HEALTH CENTRE

Between

NATIONAL HOSTING AUTHORITY

(Solomon Islands Government)

And

ROPIKO ENTERPRISES LIMITED

Issued 30th October 2023

ADDENDUM TO THE CONTRACT

THIS ADDENDUM TO THE CONTRACT ("Contract") is entered into between **NATIONAL HOSTING AUTHORITY, (NHA) ("the Purchaser")** having its principal place of business at OLD SEA KING BUILDING, POINT CRUZ, HONIARA, and **Ropiko Enterprise ("the Contractor").**

The Parties entered into the Contract Agreement for the **Construction of access road and drainage system at Burns Creek for the PG2023 Medical Health Center**, had on this date agreed to changes and amendment of the contract terms and conditions. The clauses referred herein shall repeal or include and shall form part of the final Contract.

All expressions and terms defined or used in the original Contract Agreement shall have the same meaning in this Addendum unless the context clearly requires otherwise.

1.0: AMENDMENT OF THE CONTRACT AGREEMENT IS AGREED AS FOLLOWS:

The amendment to the original contract terms and conditions shall supersede the referenced clauses of the contract as mentioned below and effectively enforced herewith.

1. **AMENDMENT 1: SECTION IV: PAYMENT SCHEDULE** - The Payment Schedule has been amended as follows:

SECTION IV: PAYMENT SCHEDULE

This payment schedule is part of contract and is crucial part of which contractor shall be remunerated. This schedule is referred to the Contractors performance and claims. Upon inconsistencies of work schedule and claims, this schedule supersedes contractors work schedule where it shall be revised to compromise with this schedule.

CONTRACT VALUE			**SBD$ 3,569,239.73**
PAYMENT NUMBER	**MILESTONE DESCRIPTION**	**AMOUNT CLAIMED**	**AMOUNT DUE PAYABLE**
Payment No. 1	Mobilization (50%) shall be made upon Contractor's mobilization to the site, site clearance & commencement of works at the site	**$ 1,784,619.87**	**$ 1,784,619.87**
Payment No.2	(20%) Payment shall be made upon completion of 50% of total Works as per the Scope of Works - upon verification by the Client's Project Manager	**$713,847.946**	**$713,847.946**

Payment No.3	(20%) Payment shall be made upon completion of the remaining 50% of total Works as per the Scope of Works, upon verification by the Client's Project Manager, and the issuance of the Certificate of Practical Completion to the Contractor	**$713,847.946**	**$713,847.946**
Payment No.4	(10%) Defects Liability Period payment shall be paid upon satisfaction of all defects rectified by the Contractor after one month of Practical Completion	**$ 356,923.97**	**$ 356,923.97**
TOTAL			**$ 3,569,239.73**

Both parties agreed herein for the amended clauses and parts of the original contract fully supersedes the original and agreed clauses and parts referenced.

This amendment shall form part of the contract and can be read or interpreted part of the original Contract.

Any further amendment shall not be considered unless otherwise agreed by both Parties.

IN WITNESS whereof the parties hereto have caused this Agreement to be executed in accordance with their respective laws the day and year first above written.

For the Purchaser- National Hosting Authority		**For the Contractor**	
Name:	Christian Nieng	**Name:**	Roland Piko
Signature:		**Signature:**	
Designation:	Executive Director	**Designation:**	Managing Director
	National Hosting Authority		Ropiko Enterprises Limited

Date: 6../.11.../2023 **Date:** 31./.10.../2023

As witnessed by Project Management Unit (GFC) Representative:

Name: Leeroy Bird

Signature: _____

Designation: Executive Director, PMU

Date 1../.11.../2023

CONTRACT AGREEMENT

FOR

CONSTRUCTION OF ACCESS ROAD AND DRAINAGE SYSTEM AT BURNSCREEK FOR THE 2023 PG2023 MEDICAL HEALTH CENTRE

BETWEEN

NATIONAL HOSTING AUTHORITY

(Solomon Islands Government)

AND

ROPIKO ENTERPRISES LIMITED

August 2023

Table of Contents

SECTION I: CONTRACT AGREEMENT 2
SECTION II: GENERAL CONDITIONS OF CONTRACT 5
SECTION III: SPECIAL CONDITIONS OF CONTRACT 14
SECTION IV: PAYMENT SCHEDULE 17
SECTION V: SCOPE OF WORKS/ SPECIFICATIONS 18
SECTION VI: SPECIFICATIONS & GENERAL REQUIREMENTS 43
SECTION VII: ANNEXES TO THE CONTRACT 49

SECTION I: CONTRACT AGREEMENT

This Contract Agreement is made between the two parties mentioned as the Purchaser and Contractor herein described as below.

The Purchaser

The Purchaser herein named as the Government of the Solomon Islands, which has its seat in Honiara, represented by the **National Hosting Authority**, legally represented in this matter by **Mr Christian Nieng**, the **Executive Director - NHA**, hereinafter referred to as the Purchaser,

And

The Contractor:

The Contractor herein named as **Ropiko Enterprises Limited** which has its registered office in Honiara, legally represented in this matter by **Mr Roland Piko**, hereinafter referred to as the Contractor, and have agreed to conduct **CONSTRUCTION OF ACCESS ROAD AND DRAINAGE SYSTEM AT BURNSCREEK FOR THE 2023 PG2023 MEDICAL HEALTH CENTRE** herein mentioned as Works specified in the Scope of Works.

1. The price for the execution of Works is confirmed in the Bill of Quantities as part of your Request for Quotation submission that was submitted for approval on **Tuesday 29th August 2023.**
2. The total accepted Bid Price shall be **SBD$ Three Million Five Hundred and Sixty-Nine Thousand Two Hundred and Thirty-Nine Dollars and Seventy-Three Cents (SBD $3,569,239.73).** The agreed price for the execution of the Works is fixed for the duration of the Contract.
3. The place where the Works have to be executed shall be at **Burnscreek Adventist High School, Burnscreek, Guadalcanal**, at the specific site as selected by the Client.
4. The time limits for execution of the Works shall be maximum of **1.5 months** and shall be on the basis turnkey specific contract process.
5. The Contractor shall strictly comply with the terms and conditions as mentioned in the Special & General Contract Conditions for the Execution of Works and the Technical Specifications/Bill of Quantities/Drawings. Any general and special terms and conditions drawn up by the Contractor do not apply.
6. The Contractor, herein **Ropiko Enterprises Limited** shall make invoice(s) to the Purchaser at the Address mentioned as Project Management Unit of National Hosting authority, quoting the, the amount of progress payment as per Schedule and above-mentioned Contract number and name.
7. This Contract is subject to the provisions of the attached General Conditions of Contracts for the Execution of Works.
8. This Contract is made up of the following documents, in order of precedence:

- *this Contract Agreement*

- *the Special Conditions of Contract;*
- *the General Conditions of Contract;*
- *Payment Schedule*
- *Scope of Works/ Specifications*
- *Specifications & General Requirements*
- *Site Setout & Drawings*
- *Annexes to the Contract*
    - Tender Award Letter
    - Performance Securing Declaration
    - Contractor's Priced Bill of Quantities
    - Contractor's Insurance Certificate
    - Contractor's HCC License
    - Contractor's Company Haus License
    - Contractor's Inland Revenue Division Tax Certificate
    - Contractor's Work Schedule

The various documents making up this Contract shall be deemed to be mutually explanatory; in cases of a different interpretation, the documents shall prevail in the order in which they appear above.

SIGNING OF CONTRACT AGREEMENT

This Contract enters into force on the date on which it is signed by both Parties [and ends as soon as the Execution of the Works has been completed].

IN WITNESS whereof the parties hereto have caused this Agreement to be executed in accordance with the laws of Solomon Islands on the day, month and year specified above.

Parties to this Contract hereby agreed and signed as follows:

For the Purchaser - National Hosting Authority		**For the Contractor**	
Name:	Christian Nieng	**Name:**	Roland Piko
Signature:		**Signature:**	
Designation:	Executive Director National Hosting Authority	**Designation:**	Managing Director Ropiko Enterprises Limited
Date:	04.09.2023	**Date:**	31.08.2023

Witness signing by Project Management Unit/NHA

Signature	.....
Name:	Leeroy Bird
Title:	Executive Director
Date:	1../09/2023

SECTION II: GENERAL CONDITIONS OF CONTRACT

The terms in these General Conditions of Contract for the Execution of Works for the Government of the Solomon Islands are defined as follows:

1.1 **SPECIFICATIONS AND PERFORMANCE REQUIREMENTS:** a document attached to the Contract which, when initialled by both parties, forms part of the Contract.

1.2 **DOCUMENTATION:** the manuals or other user instructions accompanying the installations and equipment included as part of the Works, in English or another language agreed between the Parties.

1.3 **EXECUTION OF WORKS:** these General Conditions of Contract for the Execution of Works, which apply to and form part of the Contract.

1.4 **INSPECTION:** the inspection of the Works for visible defects and non-conformity carried out at the Purchaser's request on the Contractor's site prior to Delivery.

1.5 **PURCHASER:** The Government of the Solomon Island or any other Government agency using these General Conditions of Contract for the Execution of Works.

1.6 **CONTRACTOR:** The Purchaser's counterparty.

1.7 **DELIVERY:** the delivery of the Works referred to in Article 3.1, including its assembly or installation in accordance with the requirements set out in the Contract.

1.8 **CONTRACT:** the written agreement between the Purchaser and the Contractor to which these Purchasing Conditions are declared to be applicable.

1.9 **PARTY:** The Purchaser or the Contractor, depending on the context.

1.9 **WORKS:** the description of the activities to be implemented by the Contractor, including equipment to be delivered and installed by the Contractor under the Contract.

1.10 **PRODUCT:** the equipment which the Contractor has included in his Works as part of this Contract.

1.11 The **Project Manager** is the person named in the Special Conditions of the Contract (SCC) (or any other competent person appointed by the Purchaser and notified to the Contractor, to act in replacement of the Project Manager) who is responsible for supervising the execution of the Works.

1.12 The **Contract Administrator** is the Person named in the Special Conditions of the Contract (SCC) or any other person present at the office administering the Contract.

Article 2 Application

2.1 Amendments or additions to the Contract or changes from certain Contract Conditions are binding only if they have been explicitly agreed in writing between the Parties.

2.2 In the event of inconsistency between this text of these Contract Conditions and translations of them, this text always prevails.

PERFORMANCE OF THE CONTRACT

Article 3 Delivery

3.1 Unless agreed otherwise in writing, Delivery of the Works, specified by the Purchaser in the Technical Specifications and Scope of Works, and quoted for by the Contractor will take place on the agreed delivery date(s) or within the agreed delivery period(s) at

the delivery location specified by the Purchaser, and the Contractor will bear all costs and risks connected with the delivery of the Works, including, where applicable, the import duties and responsibility for complying with the associated formalities.

3.2 The agreed delivery date(s) or period(s) are fixed and final. If the Works are not delivered at the agreed location within the agreed period, the Contractor will be in default without notice of default being required.

3.3 Delivery of the Works earlier than the agreed delivery date(s) or period(s) will take place only after prior written consent has been obtained from the Purchaser and will not alter the agreed payment date.

3.4 The Purchaser has the right to defer Delivery unless this would place a disproportionate burden on the Contractor. The Contractor is obliged to maintain the Works for the Purchaser at no additional cost until the deferred Delivery date, unless this would place a disproportionate burden on the Contractor, in which case the Parties will hold discussions to find a reasonable arrangement acceptable to both Parties. The provisions of Articles 3.2, 3.4 and 14 apply to the Delivery deferred by the Purchaser, except that the Contractor will be in default, without prior notice of default, only after the deferred delivery date(s) or period(s) have been exceeded.

Article 4 Guarantee

4.1 The Contractor guarantees that the delivered Works complies with the Specifications and Performance Requirements the Contractor has been bidding against and which have been accepted by the Purchaser by issuing this Contract, is free of defects and is suitable for the purpose for which the Works are intended. The Works does not comply with the Contract if the Product does not have the characteristics the Purchaser might expect based on the Contract.

4.2 If the Purchaser has not provided a more detailed description of the requirements to be delivered by the Contractor, the Works should in any event be of good quality and meet at least the Construction and Building standards as applicable on the Solomon Islands, customary requirements concerning soundness, fitness for purpose and workmanship, and all requirements and customary industry regulations concerning quality, safety, health and the environment.

4.3 The Purchaser may no longer refer to the fact that the Works does not comply with the Contract if it has not notified the Contractor accordingly in writing within 60 days of discovering this fact. If the Contractor receives such a notification from the Purchaser, the Contractor will rectify the defect or non-conformity within a period set by the Purchaser in accordance with the provisions of Article 13.

4.4 The Contractor guarantees that the delivered Works is free of any special encumbrance or restriction that the Purchaser has not accepted explicitly and in writing. The Contractor indemnifies the Purchaser against all claims in this regard.

4.5 The Purchaser may demand that, as security for compliance with, inter alia, the Contractor's Defects Liability Period obligations under this Contract, a guarantee may be required in a form of a Bankers Guarantee through a bank accepted by the Purchaser.

4.6 The Purchaser may demand that, as security for the completion of the Contract, and the Contractor's performance obligations under this Contract, a Performance Guarantee in the form of a Bankers Guarantee through a bank accepted by the Purchaser.

4.7 The Contractor guarantees the delivery of spare-parts for the equipment delivered under the performance of his contract for the duration of the technical or economical lifespan of the equipment quoted. Special requirements regarding the provision and availability of spare-parts may be requested at time of tendering.

Article 5 Inspection

5.1 At the Purchaser's request, the Works may be regularly inspected by the Purchaser, or a third party designated by the Purchaser during the execution of the Contract. However, the Purchaser is not obliged to carry out such an Inspection.

5.2 If the Purchaser wishes to inspect the Works:

a. the Contractor will allow the Purchaser, or a third party appointed by the Purchaser full access to the location where the Contractor is executing the Contract.

b. the Contractor will, upon request and at no cost to the Purchaser, cooperate with the Inspection and facilitate the Purchaser or a third party appointed by the Purchaser at the location and reasonable assistance in terms of staff and materials.

c. the Inspection, if the Contractor so desires, will take place in its presence or in the presence of an expert designated by the Contractor. The associated costs will be borne by the Contractor.

5.3 If the Purchaser rejects the Works to be delivered, the Contractor is obliged, without prejudice to all other rights or claims of the Purchaser, to rectify without delay, at its own expense and risk, the defects and notify the Purchaser when the Works are ready for a new Inspection. The provisions of Article 5 apply in full. Rejection by the Purchaser during the first or previous Inspection will not lead to the agreed delivery period being extended.

5.4 The approval of the Works by or on behalf of the Purchaser does not include any approval that the Works complies with the guarantees given in accordance with Article 4.

RELATIONS BETWEEN THE PARTIES

Article 6 Contacts

6.1 Each Party will appoint a contact person to maintain contacts in relation to the performance of the Contract. The Parties will notify each other in writing of the person they have appointed as their contact.

6.2 The contacts may represent and bind their Parties, unless the Contract provides otherwise.

Article 7 Method of Notification

7.1 All notifications given by the Parties on the basis of the Contract must be in writing.

7.2 Oral communications, undertakings or agreements have no legal force unless confirmed in writing.

7.3 'In writing' is understood to include 'electronically', provided:

a. the notification can be consulted by the addressee.
b. the authenticity of the notification is sufficiently guaranteed; and
c. the identity of the sender can be determined with sufficient certainty.

Article 8 Confidentiality

8.1 The Contractor will not disclose in any way any information that is provided by the Purchaser or that is made known to it or comes to its knowledge, which it knows or may reasonably suspect to be confidential, except in so far as it is compelled to disclose such information under a court ruling.

8.2 The Contractor will pass-on the duty of confidentiality referred to in this article on all staff or sub-Contractors it engages in the performance of the Contract and will ensure that this duty is observed.

8.3 The Contractor will not issue press releases or make other public statements about the Contract except with the prior consent of the Purchaser.

8.4 If the Contractor breaches its duty of confidentiality, the Purchaser may impose a penalty, as laid down in the Special Conditions of Contract. Payment of the penalty, which is payable forthwith, does not discharge the Contractor from its liability for indemnifying any loss caused by the breach.

FINANCIAL PROVISIONS

Article 9 Prices

9.1 Unless agreed otherwise in writing, the price(s) agreed for the Works include the costs of transport, taxes, and import duties, other levies, insurance, packaging costs, incidental services, disposal costs and any assembly or installation costs.

9.2 The prices for the Works are fixed, unless the Contract specifies the circumstances that may lead to a price adjustment and the way such an adjustment should be made.

Article 10 Invoicing and payment

10.1 The Contractor will invoice the Purchaser for the delivered Works at the agreed milestones and at the agreed prices in accordance with the Price Schedule. The Contractor will send the invoice to the address specified by the Purchaser, stating the date and number of the Contract and other details requested by the Purchaser.

10.2 The Contractor will send the invoice in hard copy so that it can be received and processed in accordance with the specifications issued by the Purchaser.

10.3 The right to payment arises upon Delivery of agreed milestones or after Delivery of the Works, unless the Contract provides otherwise. The Purchaser will pay the price for the delivered Works within 30 days of receiving the invoice if it satisfies the provisions of the Contract. The Purchaser has the right to offset invoice amounts owed against amounts that the Contractor owes the Purchaser.

10.4 The Purchaser may withdraw retention payment from the Contractors milestone payments. The total sum of the accumulated retention payment shall be released after satisfactory performance after the Defects Liability Period and upon verification by the Client.

10.5 Payment of an invoice by the Purchaser does not recognize that the Product is in conformity with the guarantees given in accordance with Article 4.

10.6 In case payment is subject to SIG tax law, all taxes applicable will be deducted from the invoice before payment.

Article 11 Advance

11.1 If it has been agreed that, for the purpose of performing the Contract, the Purchaser should make an Advance Payment prior to the start of the Works, the Contractor will issue the Purchaser with an Advance Payment bank guarantee in advance of making the payment to the Contractor. This Advance Payment bank guarantee issued by the Contractor will cover the value of the Advance Payment. The Purchaser is not required to pay any of the cost of the guarantee.

11.2 The '*Advance Payment Guarantee*" will be issued by a bank approved by the Purchaser, in accordance with the model attached to the Standard Bidding Documents.

11.3 The Purchaser may allow the Contractor to claim Milestone payments and allow an offset of the Advance Payment to the milestone payments.

NON-PERFORMANCE AND DISSOLUTION

12. Penalty

12.1 If the Works have not been delivered within the time limit agreed, the Contractor will owe the Purchaser an immediately payable penalty of 0.1% of the price of the Contract for every day the failure persists, subject to a maximum of 10% of that price. If Delivery has become permanently impossible for reasons other than force majeure, the Contractor will immediately be liable for the full penalty of 10% of the price of the Product in question.

12.2 The penalty is payable to the Purchaser without prejudice to all its other rights or claims, including:

a. its right to demand that the Contractor fulfil its agreed obligation to deliver the Works (in so far as this has not become permanently impossible);

b. its right to compensation.

12.3 The penalty will be set off against the amounts owed by the Purchaser, irrespective of whether the rights to such amounts have been assigned to a third party.

Article 13 Non-performance

13.1 If the delivered Works or the equipment incorporated into the Works does not comply with the guarantees referred to in Article 4, the Purchaser may demand that the Contractor repair or correct the Works. The associated costs will be borne by the Contractor.

13.2 If, after receiving a written demand from the Purchaser, the Contractor fails to comply, within the period stipulated therein, with a requirement as referred to in paragraph (13.1), the Purchaser has the right, without prior recourse to the Courts, to choose between:

a. replacement of the Contractor or replacement/repair of the Equipment incorporated into the Works by a third party at the Contractor's expense;

b. replacement of the Contractor or return of the Equipment incorporated into the Works at the Contractor's expense and risk and dissolution of the Contract in accordance with the provisions of Article 16 and, in consequence, crediting of however much of the purchase price has already been paid for the Works in question.

13.3 The provisions of paragraphs (13.1) and (13.2) do not affect other rights and claims that the Purchaser may derive from non-performance.

Article 14 Liability

14.1 A Party who fails to meet its obligations is liable to the other Party for any loss incurred by the other Party.

14.2 The Contractor indemnifies the Purchaser against any third-party claims for damages resulting from a failure as referred to in paragraph 1.

Article 15 Force Majeure

15.1 In the event of temporary force majeure, the Contractor will immediately notify the Purchaser in writing after the circumstances bringing about force majeure have occurred, stating the cause of the force majeure. The Purchaser then has the right to choose between:

a. Allowing the Contractor to defer compliance with its obligations under the Contract for a reasonable period of up to four weeks. If the Contractor is still unable to fulfil its obligations under the Contract when this time limit expires, the Purchaser has the right to dissolve the Contract with immediate effect, without being obliged to pay compensation or any costs to the Contractor.

or

b. Dissolution of the Contract with immediate effect, without being obliged to pay compensation or any costs to the Contractor.

15.2 In the event of long-term force majeure on the part of the Contractor, the Contractor will immediately notify the Purchaser and the Purchaser has the right to dissolve the Contract with immediate effect out of court, without being obliged to pay compensation or any costs to the Contractor.

15.3 The term 'force majeure' is in any event understood not to include: staff shortages, strikes, staff illness, shortages of raw materials, transport problems, breach of obligations by Contractors, failures in the Contractor's production process and liquidity or solvency problems on the part of the Contractor, or failures on the part of third parties engaged by the Contractor.

Article 16 Dissolution

16.1 Without prejudice to the other provisions of the Contract, either Party may dissolve the Contract in full or in part out of court by registered mail, without being obliged to pay any compensation to the other Party, if the other Party is in default or compliance is temporarily or permanently impossible.

16.2 In the event of force majeure, the Purchaser has the right to dissolve the Contract in accordance with the provisions of Article 15.

16.3 The Purchaser may dissolve the Contract with immediate effect out of court by registered mail, without being required to send any demand or notice of default, and without being obliged to pay the Contractor any compensation, if the Contractor applies for or is granted a provisional or definitive suspension of payments, files for bankruptcy, is declared bankrupt, if its business is wound up, if it ceases trading, if a substantial proportion of its assets are seized, if it is deemed on any other grounds to be no longer capable of fulfilling its obligations under the Contract, if bribery or conflicts of interest as referred to in Article 21 occur, or if the Contractor undergoes a merger or division.

16.4 If the Contract is dissolved, the Contractor will repay the undue amounts already paid to it by the Purchaser. If the Contract is partially dissolved, the Contractor is obliged to repay only the payments relating to the dissolved part.

Article 17 Retention of right to demand compliance

17.1 If one of the Parties fails to demand compliance with any provision within a time limit set by the Contract, this will not affect its right to demand compliance at a later date, unless the Party in question has expressly accepted the non-compliance in writing.

MISCELLANEOUS

Article 18 Documentation

18.1 The Contractor will provide the Purchaser with clear, adequate "*as build*" drawings of the Works as finally implemented and full documentation, drawn up in English or another agreed language, on the characteristics and functionalities of the Equipment included into the Works.

18.2 The Purchaser has the right to publish and reproduce the Documentation solely for the users envisaged by the Contract.

18.3 The Contractor indemnifies the Purchaser against claims that third parties might enforce on the ground of a copyright accruing to them in relation to the Documentation.

Article 19 Assignment of rights and obligations under the Contract

19.1 Neither Party is entitled to transfer rights and obligations arising from the Contract to third parties without the written consent of the other Party. The other Party will not withhold its consent without reasonable grounds. It may attach conditions to its consent.

19.2 Paragraph (19.1) does not apply to the establishment of limited rights, such as the right of pledge.

Article 20 Insurance

20.1 The Contractor has taken out and will retain adequate insurance cover for business related liability, including 3rd party liability, Workmen's Compensation, as identified in the Special Conditions of Contract.

20.2 At the Purchaser's request, the Contractor will immediately present either the original or a certified copy of the policies and proof of the payment of premium for the insurance referred to in paragraph 1, or a statement from the insurer to the effect that the insurance

exists. The Contractor will not terminate or alter the insurance contract without the Purchaser's prior written consent. The Contractor has no right to change the insured sum to the Purchaser's disadvantage without the Purchaser's prior written consent. The insurance premiums owed by the Contractor are deemed to be included in the agreed prices.

20.3 The Contractor assigns to the Purchaser in advance all rights to the payment of insurance proceeds as referred to in paragraph 20.1, in so far as such proceeds relate to damage for which the Contractor is liable to the Purchaser under the Contract. The Contractor is obliged to notify its insurance company in writing of this assignment and to send a copy of this written notice to the Purchaser, without prejudice to the Purchaser's right to notify the insurer itself. Any insurance proceeds paid directly by the insurer to the Purchaser will be deducted from the amount of compensation the Contractor is required to pay to the Purchaser in respect of the insured event.

Article 21 Bribery and conflicts of interest

21.1 The Parties will not offer to each other or to third parties, or ask for, accept or obtain a promise of, from each other or third parties, whether for themselves or for any other Party, any gift, reward, compensation or benefit of any form whatsoever if this could be construed as constituting an illicit practice. Such a practice may constitute grounds for dissolving the Contract either in full or in part.

21.2 If it transpires that one of the Purchaser's subordinates was in the Contractor's employment, regardless of whether or not such employment was paid, during the formation of the Contract, and that the Purchaser was not informed of this prior to the signing of the Contract, the Purchaser may dissolve the Contract with immediate effect out of court, without being required to give any notice of default or to pay any compensation.

Article 22 Invalidity

22.1 If one or more provisions of these General Contract Conditions or the Contract are found to be invalid or are nullified by a court, the remaining provisions will retain their legal force. The Parties will consult on the former provisions in order to make alternative arrangements. The alternative arrangements must not undermine the purport of these General Conditions for the Execution of Works or the Contract.

Article 23 Follow-up order

23.1 The Contract does not entitle the Contractor to any follow-up orders.

Article 24 Long-term obligations

24.1 Provisions which by their nature are intended to persist after the Contract has been performed will remain in force after the expiry of the Contract. They include the provisions on: guarantee (Article 4), confidentiality (Article 8), non-performance (Article 13), liability (Article 14), termination (Article 16.4), documentation (Article 18), assignment of insurance proceeds (Article 20.3), and disputes and applicable law (Article 25).

Article 25 Disputes and applicable law

25.1 Any dispute between the Parties in relation to the Contract will only be submitted to the competent Court of the Solomon Islands, unless the Parties agree an alternative means of dispute resolution.

25.2 The Contract is governed by the law of the Solomon Islands.

Article 26 Final provisions

26.1 Any changes from this Contract are binding only if they have been expressly agreed by the Parties in writing.

26.2 Any written or oral agreements previously made by the Parties about the order(s) placed under this Contract for the Delivery of the Product will be nullified by the signature of the Contract.

SECTION III: SPECIAL CONDITIONS OF CONTRACT

The following Special Conditions of Contract shall supplement the General Conditions of Contract for the Execution of Works for the Solomon Islands Government. Whenever there is a conflict, the provisions herein shall prevail over those in General Conditions for the Execution of Works (GCC). The corresponding Article numbers in the General Conditions of Contract are indicated below.

<table>
<tr><th>GCC Article</th><th>No.</th><th>Particulars</th></tr>
<tr><td rowspan="3">1. Definitions</td><td>1.5</td><td>a. THE PURCHASER IS:

National Hosting Authority
Solomon Islands Government
P.O.Box 2443
Honiara,
Solomon Islands

b. THE CONTRACTOR:

Ropiko Enterprises Limited
P.O.Box 1817
Honiara
Solomon Islands
Email: ropikoenterprises@gmail.com

c. THE LOCATION SITE IS:

Burnscreek Adventist High School, Burnscreek, Guadalcanal</td></tr>
<tr><td rowspan="2">1.12,
1.13</td><td>• THE PURCHASER'S PROJECT MANAGER IS:
Cora Makini
Project Management Unit
National Hosting Authority
Email: CMakini@sol2023.com.sb</td></tr>
<tr><td>• THE CONTRACT ADMINISTRATOR IS.
Soleana Gagahe
Contracts Manager
Project Management Unit
National Hosting Authority
Email: SGagahe@sol2023.com.sb

• CONTRACTOR'S PROJECT MANAGER
Roland Piko
Ropiko Enterprises Limited
P.O.Box 1817
Honiara
Solomon Islands</td></tr>
</table>

		Email: ropikoenterprises@gmail.com
3. Delivery of the Works	3.1	The Works shall be completed within ***2 weeks*** from the Contract Commencement date. **Note:** *For this Contract, a six-day working week is assumed. Therefore, the Works shall be completed within weeks of commencement of the Contract. The Contract commences on the day that it has been signed and countersigned by all parties to the Contract.*
4. Guarantee	4.5	The Defects Liability Period shall be ***1 month from date of Practical Completion for all the Works*** for quality of workmanship, from the date of acceptance of the Works. The Contractor shall, in addition, comply with the performance as specified in the Contract. If for reasons attributable to the Contractor these guarantees are not attained in whole or in part, the Contractor shall, at its discretion, either: a) make such changes, modification, and/or additions to the Works or any part thereof as may be necessary in order to attain the contractual guarantees specified in the contract at its own cost and expense.
	4.6	This Contract must be supported by a duly signed Performance Securing Declaration, acceptable to the Purchaser, in lieu of a Performance Security. The Performance Securing Declaration is at *Section VII: Annex II* (page 38) of the Contract.
5. Inspection	5.1	Inspection and tests by the Purchaser or 3rd party in name of the Purchaser regarding the Execution of the Works and the quality levels applied to may be implemented as follows: • The time limit for inspection and quality assurance may be always undertaken during the Execution of the Works. There is no need for the Purchaser or their representative to announce their inspection beforehand.
6. Contacts	6.1	**THE PURCHASER'S AUTHORIZED REPRESENTATIVE FOR THIS CONTRACT IS.** Leeroy Bird Executive Director Project Management Unit Email: LBird@sol2023.com.sb **THE CONTRACTOR'S AUTHORIZED REPRESENTATIVE IS:** Roland Piko Ropiko Enterprises Limited P.O.Box 1817 Honiara Solomon Islands Email: ropikoenterprises@gmail.com

9. Prices	9.1	The Contract price is fixed for the duration of the Contract.
	9.2	Variations of the Contract price may be granted by the employer provided the request for variation is made prior to the work being undertaken, and the variation is assessed by the Employer to be necessary and the price quoted is reasonable.
10. Payment	10.1	a) Payment for Works carried out under this contract shall be made in SBD. The Contractor is to submit a claim for Works completed. The Project Manager is to inspect the Works and if in grievance with the Contractor authorise payment of the claim. b) If there is a difference between the assessed Works complete and the claim amount the Contractor is to adjust the claim to match the value of the completed Works. c) Payment for milestone completion shall conform to the payment schedule as in section III of the Contract.
	10.6	In case payment is subject to SIG tax law, the latest information on the relevant withholding taxes and other payables are to be found at the website of the Inland Revenue Department: http://www.ird.gov.sb
11. Advance Payment	11.1	The first scheduled payment shall be the Mobilization Payment which shall be paid after the project has mobilized, materials have been delivered to site and work is ready to commence.
12. Penalty (Liquidated Damages)	12.1	Applicable rate for the Liquidated damages is: 0.1% per day.
14. Contractor's Liability	14.1	Notwithstanding Article 14.1 of the GCC, the Contractor's liability is twice the Contract value as stated in the Contract between Purchaser and Contractor.
20. Insurances	20.1	Contractor shall provide with their tender to following proof of insurance: - Workmen's Compensation — As required by SI Law - Third Party Liability — SBD 2,000,000 - Equipment for use in Project — Replacement Value

SECTION IV: PAYMENT SCHEDULE

This Payment Schedule is part of the Contract and is crucial part of which the Contractor shall be remunerated. This Schedule is referred to the Contractor's milestones and claims. If there are any inconsistencies of milestones claims from the Contractor, these milestones and Payment Schedule stated herein supersedes such Contractor's claims.

CONTRACT VALUE			SBD $3,569,239.73
PAYMENT NUMBER	MILESTONE DESCRIPTION	AMOUNT CLAIMED	AMOUNT DUE PAYABLE
Payment No.1	Mobilization (50%) Payment shall be made upon Contractor's mobilization to site, site clearance and commencement of Works.	$ 1,784,619.87	$ 1,784,619.87
Payment No. 2	40% payment shall be made upon completion of all Works, upon verification by the Client and Issuance of the Certificate of Practical Completion from the Client to the Contractor	$ 1,427,695.89	$ 1,427,695.89
Payment No. 3	10% Defects Liability Period payment shall be paid upon satisfaction of all defects rectified by the Contractor after one month of Practical Completion.	$ 356,923.97	$ 356,923.97
TOTAL			**$3,569,239.73**

SECTION V: SCOPE OF WORKS/ SPECIFICATIONS

1. CONSTRUCTION OF ACCESS ROAD TO PG2023 HEALTH CENTRE AT BURNSCREEK ADVENTIST SCHOOL COMPOUND

1.1 Introduction

The National Hosting Authority (NHA) through the Project Management Unit (PMU) is seeking to engage a skilled Contractor to construct an access road to the proposed PG 2023 Health Centre at Burnscreek Adventist School compound. The access road from the main entrance up to the clinic's main entrance covers an area of 1629.13 m^2.

The scope of work for this is split into three (3) components:

1. **Road 1 (R1)** – Access Road from the main entrance (blue gate) to the proposed boom gate for the clinic (concrete);
    a. **R1A-** Access Road part 1 whereby the road gradient is 0.53%.
    b. **R1B-**Access Road part 2 whereby the Road gradient is 2.4%.
2. **Road 2 (R2)** – Boom gate to the building's main entrance (concrete)

1.2 Site Locality

Location: The site whereby Works shall take place is within the Burnscreek Adventist School Compound.

1.3 Design Criteria

The access road must be according to the following criteria:

- The newly constructed road will be:
    - **R1**: Note that R1 is divided into 2 sections with a change to the gradient. Both R1A and R1B have a Road gradient of 1% fall to the fence line where the proposed drainage will be constructed.
        - **R1A**- From Chainages 0-64; **0.53%** road gradient.
        - **R1B**-From Chainages 64-126; **2.4%** road gradient.
    - **Spoon drain running on left side of R1 at 0.5 m wide x 63 m long x 0.15m deep.**
    - **R2**: **18.38 m wide x 46.05 m long; 1%** fall to the fence line.

1.4 Objective & Scope for Access Road

Construction of the access road is to allow access into the clinic site for those requiring to use the services. The construction of the new access road requires the Contractor to:

- Supply, spread, and compact coronas fill material to R1 & R2 with the relevant and required road gradient
- Construct concrete roads for R1 & R2;

The Scope of Works below covers R1 & R2; is twofold in which Works for concrete road R1 will form Part 1 of the Scope of Works and Works R2 will form Part 2 of the Scope of Works herein. The Works conducted by the Contractor are expected to include, but are not limited to the following:

1.5 Part 1 – Concrete Road R1 (R1A & R1B).

The construction of R1 Scope of Works and drawings will be read in conjunction with the Scope of Works for stormwater and its attached drain details. This is to ensure all criteria are met and all levels are satisfied.

A. Machinery

a. Provision of machinery associated with the job (excavator, grader, roller, dump truck etc);

B. Site Preparation

a. Selection of Worksite, vehicle parks, and material dumps
b. Clearance of any vegetation;
c. Strip topsoil along R1 at 100mm depth;
d. Site set out according to the drawings and coordinates provided.

C. Road Surface Drainage Construction

a. Earthworks conducted also allow for sufficient fall to avoid water ponding during construction;
b. Maintain 2.4% fall along the road towards drainage (R1A) which then falls onto the road gradient 0.53% (R1B)

D. Earthworks

a. Strip topsoil depth as shown in *B. Site Preparation* above;
b. *E*nsure that finished levels (FL) of R1 (inclusive of R1A and R1B) are established as shown in Section V of the Contract, Part 1.7 '*Part 3 – Technical Drawings – Construction of Access Road.*'
c. Identify the site for dumping stripped soil which shall be agreed upon by the Engineer;
d. Supply fill material specified i.e., coronas for sub-base
e. Ensure fill material is of good quality, clean, and free of any perishable material or any material that will affect the integrity of its intended purpose;

f. Backfill and spread using coronas fill material in the area indicated in *Section V of the Contract, Part 1.7 'Part 3 – Technical Drawings – Construction of Access Road.'* – this should cover low-lying water-logged area and R1;

g. Maintain falls for both R1 (R1A and R2B) and spoon drain.

h. Ensure the spoon drain runs 63m along the left side of R1 and runs diagonally across R1A to the main drain on the right. Refer to *Section V of the Contract, Part 1.7 'Part 3 – Technical Drawings – Construction of Access Road.'* for full details;

i. Fill and Compact;

j. Grade to desired falls as indicated in *Section V of the Contract, Part 1.7 'Part 3 – Technical Drawings – Construction of Access Road.'*;

E. Construction of Access Road

a. Ensure R1 is levelled, graded, and compacted to desired FL;

b. Prepare for spoon drain alongside R1 – refer to *Section V of the Contract, Part 1.7 'Part 3 – Technical Drawings – Construction of Access Road.'*;

c. Prepare and install formworks for concrete Works;

d. Prepare and install mesh for concrete pouring;

e. Ensure the proposed road level after compaction matches levels indicated in the drawings;

f. Refer to drawings attached in *Section V of the Contract, Part 1.7 'Part 3 – Technical Drawings – Construction of Access Road.'*

F. Post-Construction

a. Site clean-up;

b. Removal of excess material and/or debris if any;

c. Demobilise.

1.6 Part 2 – Concrete Road R2

A. Machinery

a. Provision of machinery associated with the job (excavator, grader, roller, dump truck, etc);

B. Site Preparation

a. Selection of Worksite, vehicle parks, and material dumps

b. Clearance of any vegetation;

c. Strip topsoil along R2 at 100mm depth;

d. Site set out according to the drawings provided in *Section V of the Contract, Part 1.7 'Part 3 – Technical Drawings – Construction of Access Road.'*;

C. Road Surface Drainage Construction

a. Earthworks conducted also allow for sufficient fall to avoid water ponding during construction;

b. Maintain 1% fall along R2 towards drainage;

D. Earthworks

a. Strip topsoil depth as shown in *H. Site Preparation* above;

b. Establish finished level (FL). Refer to *Section V of the Contract, Part 1.7 'Part 3 – Technical Drawings – Construction of Access Road.'*;

c. Identify the site for dumping stripped soil which shall be agreed upon by the Engineer;

d. Supply fill material specified i.e., coronas for sub-base;

e. Ensure fill material is of good quality, clean and free of any perishable material or any material that will affect the integrity of its intended purpose;

f. Backfill and spread using coronas fill material in the area indicated in *Section V of the Contract, Part 1.7 'Part 3 – Technical Drawings – Construction of Access Road.'* – this should cover area starting from edge of R1 to main entrance of the building;

g. Maintain falls to ensure downslope towards drainage of the site;

h. Backfill and Compact;

i. Grade to desired falls;

E. Construction of Access Road

a. Ensure R2 is levelled, graded, and compacted to desired FL;

b. Ensure R2 FL matches with R1 FL;

c. Prepare and install formworks for concrete Works;

d. Prepare and install DCP membrane and mesh for concrete pouring;

e. Ensure the proposed road level after compaction matches levels indicated in the drawings;

f. Refer to all drawings attached in the Annexes;

F. Post-Construction

a. Site clean-up;

b. Removal of excess material and/or debris if any;

c. Demobilise.

CURRENT CONDITIONS

The site for the proposed access road is located within the Burnscreek Adventist School compound. The existing access road is a relatively low terrain that experiences boggy conditions during rainy weather due to a lack of drainage, soil type, and sections of soft and low areas.

SKILLS & EXPERIENCE

Minimum requirements to meet qualifications,

- Have professional and technical experts in road construction, earthworks.
- Experience in operating machinery for earthworks.
- TIN Number.
- Must be legally registered.
- Experience of a company with similar work.
- Schedule of Works-Proposed schedule to complete all Works by the required completion date.
- Valid liability insurance policy in place showing the limits of liability.
- Good working history with no background of non-compliance.

1.7 Part 3 – Technical Drawings – Construction of Access Road

2. CONSTRUCTION OF DRAINAGE SYSTEM

2.1 Introduction

This document outlines the Scope of Work for the design and construction of a comprehensive drainage system to manage stormwater runoff for the proposed SPG 2023 Medical Health Centre. The efficient management of stormwater is crucial to ensure the safety, functionality, and longevity of the PG2023 Medical Health Centre facility. This project aims to create a sustainable and robust drainage system that will effectively collect, convey, and safely discharge stormwater away from the PG2023 Medical Health Centre, minimizing the risk of flooding and water-related damage.

The Scope of Work encompasses various stages, from preliminary assessments and design to construction by adhering to this Scope, we will deliver a tailored drainage solution that addresses the specific challenges posed by stormwater runoff in the proposed PG2023 Medical Health Centre's location. This document serves as a roadmap for all stakeholders involved in the project, outlining the tasks, responsibilities, and deliverables required to achieve successful stormwater management for the PG2023 Medical Health Centre.

2.2 Site Locality

Location: The alignment of the drain is shown in the red arrow below. The location is in the Burns Creek/ SDA compound.



2.3 Project Objectives

The primary objectives of this project are as follows:

a. Stormwater Capture: Develop a drainage system capable of effectively capturing stormwater runoff from the PG2023 Medical Health Centre and its surrounding areas.

b. Conveyance and Management: Construct a concrete-lined drainage system with appropriate slope and capacity to efficiently convey stormwater away from the site, preventing potential flooding.

c. Environmental Considerations: Design and implement the drainage system in compliance with HCC regulations and environmental guidelines, minimizing the impact on the surrounding areas.

d. Long-Term Resilience: Construct a durable and low-maintenance drainage system that can withstand heavy rainfall events and continue to function optimally over its operational lifespan.

2.4 Part 1 – Specific Scope of Works

2.4.1 Site Assessment, Establishment and Clearance for Concrete-Lined Drainage Works:

a. Conduct a thorough inspection of the specified site to identify the boundaries, existing structures, utilities, and areas with water accumulation.

b. Assess the condition and determine the extent of the drainage system.

c. Evaluate the topography and surrounding terrain to identify the optimal discharge point to a lower stream.

d. Identify potential hazards and implement appropriate safety measures.

2.4.2 Excavation and Earthworks

a. Excavate the designated area for the concrete-lined drainage system, ensuring sufficient width and depth for effective water flow. See design drawings for details.

b. Remove any obstacles, debris, or vegetation that may impede the construction process or obstruct water flow.

c. Conduct necessary soil testing to assess soil conditions and ensure proper compaction.

d. Implement appropriate shoring or support structures to maintain the stability of the excavation.

e. Ensure proper soil compaction and leveling to provide a stable base for the construction works.

2.4.3 Grading and Sloping

a. Ensure proper grading and sloping of the drainage channel to facilitate efficient water flow.

b. Use leveling instruments to verify the accuracy of the slope and adjust as necessary.

2.4.4 Concrete Lining and Construction

a. Prepare the subgrade of the excavation site by leveling and compacting it.

b. Construct formwork to define the shape and dimensions of the concrete-lined drainage channel. See drawings for detail.

c. Place and consolidate reinforced concrete in the formwork to create a durable and smooth lining. See drawings for detail.

d. Cure the concrete lining to ensure proper strength development.

2.4.5 Road crossings construction

a. Construct 2 x road crossings. Culvert crossing and concrete cast in-situ with 25MPa. See the drawing for details and seek the Site Engineer for advice.

2.4.6 Site Clean-up

a. Remove any excess soil, debris, or construction waste from the site once the works are completed.

b. Restore the surrounding area to its original condition or as specified by the work done.

c. Dispose of waste materials in accordance with HCC regulations.

2.4.7 Final Inspection and Testing

a. Conduct a comprehensive inspection of the completed concrete-lined drainage system.

b. Test the system's functionality and water flow to ensure efficient drainage.

c. Obtain NHA's approval for the completed work.

2.4.8 Project Timeline

The project is expected to take approximately **1 month** from the start date to completion. However, the timeline is subject to change based on weather conditions and any unforeseen circumstances.

2.4.9 Project Cost

The proposed cost for the project is provided in the BoQ (refer to *Section VII, Annex IV – Contractor's Priced Bill of Quantities).* This cost includes all materials, labor, and equipment required for the project. Any additional costs that may arise due to changes in the scope of work will be discussed and approved by the NHA before proceeding.

2.4.10 Conclusion

The completion of the drainage system Scope of Work for the proposed PG2023 Medical Health Centre Stormwater project marks a significant milestone in ensuring the facility's resilience and sustainability. Through planning, design, and construction, we have developed a comprehensive solution that efficiently manages stormwater runoff, safeguarding the PG2023 Medical Health Centre from potential flooding, erosion, and water-related damage. The scope of work ensures the safety and functionality of the SPG 2023 PG2023 Medical Health Centre while effectively managing stormwater.

By adhering to the defined Scope of Work, we have created a tailored drainage system that addresses the unique challenges presented by the PG2023 Medical Health Centre's location and also delivers a reliable drainage system that aligns with the PG2023 Medical Health Centre's needs and contributes to a safe and sustainable healthcare environment.

2.5 Part 2 – Technical Drawings – Construction of Drainage System

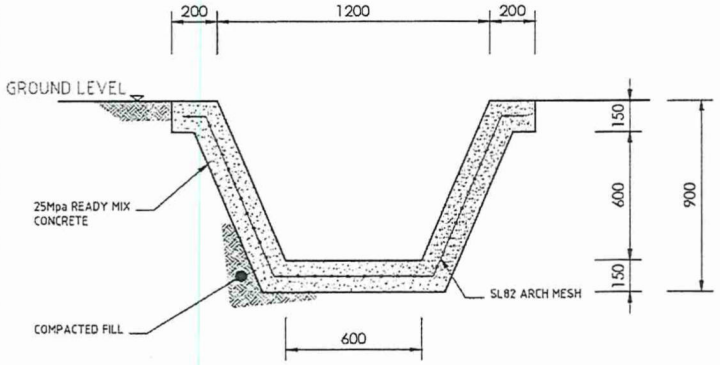

- XX-XX

LINE DRAIN TYPE 'A'

1:20 @ A3

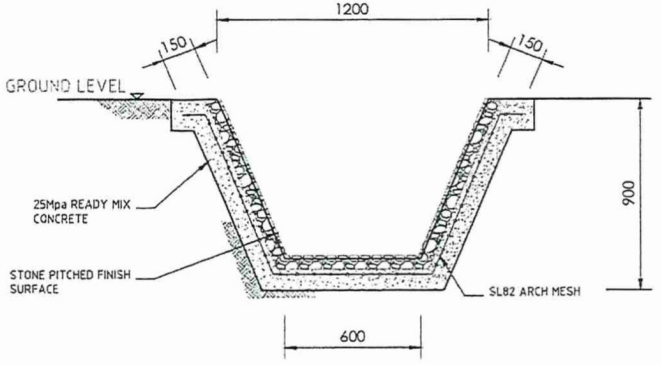

- XX-XX

STONE PITCHED DRAIN

1:20 @ A3

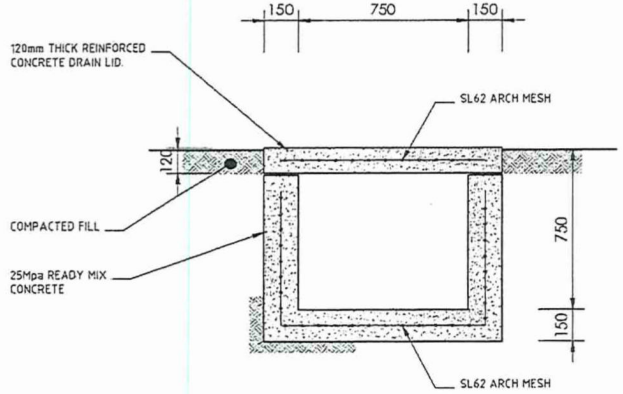

- XX-XX

LINE DRAIN TYPE - 'U'

1:20 @ A3

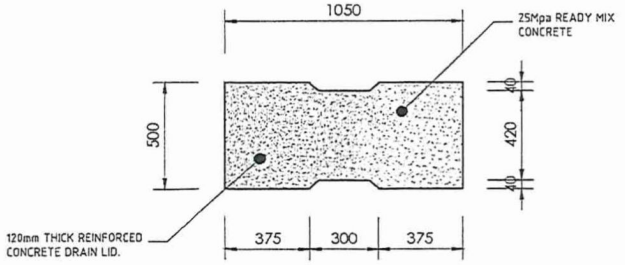

- XX-XX

U-DRAIN LID PLAN

1:20 @ A3

2023 PACIFIC GAMES SOLOMON ISLANDS

National Hosting Authority
2023 Pacific Games

All Architectural, Structural, Civil, Hydraulics and Landscape drawings shall remains the sole property of the owner and are not to be duplicate or copied without written permission.

ISSUE	DESCRIPTION	DATE
A	CONCEPT DRAFT	-/-/-

NOTE:
DRAIN SPECIFICATION TO BE CONFIRM BY PROJECT ENGINEER

PROJECT TITLE:
SOL2023, IF, GAMES CLINIC DRAINAGE

DRAWING TITLE:
TYPICAL DETAILS - LINE DRAINS

CLIENT:
National Hosting Authority

ISSUE STAMP:

DRAWN. D.P	CHECKED. C.M
APPROVED. -	SCALE. 1:20 @ A3
PROJECT No. -	PLOT DATE. 8/7/23
SHEET No. 01	ISSUE No. A

SECTION VI: SPECIFICATIONS & GENERAL REQUIREMENTS

1. Preliminary & General

The Contractor will be responsible for the following:

- Provision of all material and labor on site.
- High quality of workmanship and finishes by appropriately qualified personnel.
- Maintenance of site access and site storage.
- Provision of all temporary site service including, but not limited to; water, electricity, site sanitation etc.
- Protection of all Works.
- Provision of site office and site storage to suit the Contractor's personnel needs.
- Connection of all permanent services to the Works.
- Site cleanliness and tidiness for maintenance of safety and environment.

2. Health and Safety

The Contractor is to ensure safety of all personnel and the public whilst on site. It is mandatory for the Contractor to submit a Work Safe Method Statement before commencing any Works on site. The Work Safe Method Statement is to be reviewed and approved by the Employer to a minimum the following criteria must be met;

3. General Safety Requirements

The Contractor must put controls in place to eliminate, isolate or minimize all hazards. General hazards include;

- General public
- Heavy plant (trucks reversing, excavators)
- Deep excavations
- Falling objects
- Hot Works
- Working at height

3.1.1 Personal Protective Equipment (PPE)

Contractors personnel or any visitor on site must comply, at a minimum, with the following;

Safety boots/ Footwear	Steel cap boots to be worn at all times
High Visibility (HV) Clothing	HV jacket or vest to be worn at all times.
Head Protection	Hard hat to be worn when working under falling hazards (cranes, scaffolding, double storey structure
Hearing Protection	Hearing protection is to be used when operating or in the vicinity of noisy equipment.

3.1.2 Specific Safety Requirements

The Contractor must, to a minimum, comply with the following:

Equipment	The Contractor is to nominate the equipment to be used on site. A detailed equipment list is to be submitted as part of the Contractors tender submission. All equipment is to be in safe and working order and must all have current licenses where appropriate. Vehicles are to be operated by qualified or adequately trained personnel.
Ladders	Must be available on site and in good condition and fit for industrial use.
Scaffold	Must be in good condition and adequately assembled by trained personnel
Power Tools	Tools on site must be serviced, in good condition and adequate for the task/job carried out.
Electricity	Any Works that involve the use of electricity, including temporary power during Works, is to be carried out be a suitably trained and certified electrician.
Fencing	Contractor is to separate construction area from general public areas using fencing or barrier tape. The site should be a distinct isolated work area. All hazards such as open excavation also need to be clearly marked or fenced.
Signage	Contractor to erect appropriate warning signage at work site. A project signboard is to be installed at the site entry at the commencement of Works. Project sign board needs to be approved by Employer's representative prior to erection.
Storage	Materials are to be stored in an appropriate and safe manner; and in accordance with any relevant material safety data sheet (MSDS).
Waste	All waste is to be collected and moved to a location identified and approved by Employer's representative as a waste disposal area.
Ablution	The Contractor should provide adequate ablutions for all personnel or visitors on site. Ablutions must be cleaned on a regular basis to maintain adequate hygiene standards.
Access	Site must have a designated entry and exit point. The entry and exit point should be clearly signed and located to provide minimal disruption to the public.
Authorised Personnel	Only authorised personnel allowed on site – appropriate signage must be in place to communicate this.
Evacuation Plan	An emergency evacuation and management plan must be in place and made known to all on site.
Fire fighting	Fire extinguishers must always be available on site and positioned in areas for ease of access in emergency.
First Aid	A first aid kit must always be available on site. The Contractor is to ensure that at least two of the Contractor's personnel on site at any time are adequately trained and certified in First Aid.
Emergency Response	Emergency response (Police, Ambulance, Fire Brigade) numbers must be available and displayed on site in event of an emergency.

Drug & Alcohol	No smoking, alcohol consumption or chewing of betel nut is permitted by the Contractor or staff. No illicit drug of any type are to be present or in use on site.
Child Protection	Children are not allowed on site at any time and no worker is ever to accompany a child on site without the expressed approval of the Employer's representative

3.1.3 Quality

The Contractor is to ensure a Quality Management System (QMS) is maintained throughout the duration of the Works. To a minimum the QMS must ensure the following is maintained.

- Quality Management Plan.
- Quality Management records (testing records, compliance certificates).
- Internal quality audits.
- Non conformance and corrective actions list.

The Contractor must present the QMS and Quality management plan to the Employer's representative for approval before the Works can commence.

3.1.4 Environment

Environmental measures for the project are to include:

- All waste is to be removed from site and disposed of as per Local Authority requirements.
- No waste is to be burnt on site.
- Protective measures must in place to ensure that no run off from the site goes into nearby waterways.
- Any spill of chemicals, diesels or hazardous materials are cleaned up immediately. All hazardous materials are stored in a safe place and in a way that spillage will not harm the environment.

1. Project Administration

Authorised Representative	The Contractor must nominate an authorized representative for all external communications. The authorized representative must be suitably qualified and fluent in the language of English. All communications between parties should be in English.
Pre – Start Meeting	A prestart meeting will be held at the site prior to the commencement of the Works. The objective of the prestart meeting is to confirm the project outcomes, responsibilities and relationships for the project. Attendees at the meeting are to include representatives of the Contractor, Employer and relevant authorities.

Project Meetings	Project Meetings should be held on a fortnightly basis during the contracted period of Works. Attendees should include representatives of the Contractor and Employer. Project meetings may also be held as required at the request of the Employer or the Contractor.
Project Reporting	The Contractor is to submit weekly and monthly project reports and summaries. These reports should detail to a minimum: • Project progress and timeline update • Key issues and blockages • Pending approvals • Safety summary • Quality summary • Equipment summary • Staff records • Photographic records • Project Finance update
Payment Claims	Payment Claims are to be presented to the Employer's Representative /Project Manager whenever work associated with a milestone payment has been completed. Proof of completion of the milestone in the form of a monthly site report showing the completed work and a statement from the Contractor must accompany the Payment Claim. Payment Claims will be reviewed by the Employer's representative/Project Manager for approval. Once approval has been provided the Contractor can submit an invoice for payment.
Work Hours	Work hours are generally to be 8.00am to 5.00pm Monday to Friday. Extended work hours can be requested by the Contractor and approval provided by the Employer's representative.

3.1.5 EarthWorks

Earthworksis to include, but not limited to, all clearing and grubbing, excavation, trenching, shoring, backfilling, removal of spoil material and placement of fill material. All excavation is to be conducted in a safe manner using nominated equipment. All equipment used in excavation is to be nominated in the Contractor's Safe Work Method Statement.

All excavation related activities on site are to be compliant with design documentation and approved by the Employer's representatives.

3.1.6 Clearing and Grubbing

Clearing and grubbing operations shall be carried out in the following areas as relevant:

- Areas where general Earthworksare to be constructed, plus a margin of 3m or to property boundaries; whichever is the lesser.
- Areas specified for visibility.
- Other areas as indicated on the drawings.

Disposal of Cleared and Grubbed Materials:

Materials that comply with the requirements specified may be used in the Works, otherwise the material shall be removed from the Site or if approved, be disposed within the Site.

3.1.7 Excavation Dewatering

Allow to drain all foundation excavations to special low-level sumps, located away from the permanent Works. Excavation shall remain dry for duration of the work, and prior to placing of hard fill or site concrete. Prevent all water flow over freshly laid work.

3.1.8 Backfilling

Bring all filling on to the site unless it can be provided from soil recovered from the site. Filling shall be sound material, free of perishable material or any material that will not form stable fill. The fill shall be the best of the clean inorganic excavated material, fully stabilised as approved by the site supervisor.

3.1.9 Consolidation

Backfill around all foundations with approved backfill material and compact by approved mechanical means. Place in layers of 150mm loose depth to levels shown on the foundation drawings. Consolidate each layer to at least 100% standard of the maximum dry density available at standard effort before proceeding to next layer. Materials are to be spread so as not to disturb subgrade and shall be placed in uniform layers with each layer interlocking the layer below. Placing procedures shall ensure minimum segregation.

3.1.10 Backfilling for Specific Structures

Under floor slabs on fill provide 150mm minimum thickness of approved crushed coral fill, blinded with a 50mm layer of sand or similar approved fine material so as to produce a surface which will not damage the damp proof membrane overlay. Hard fill shall be placed in layers not exceeding 100mm loose depth and shall be smooth wheeled roller (5 tonne), or vibrating roller with equivalent Compactive effort to 100% standard of the maximum dry density. It will be noted that concrete floors will be supported off this filling.

3.1.11 Top Soil

Where possible stockpile topsoil for re-spreading for future landscape Works as necessary.

3.1.12 Definitions

1.1 **Rock:** Any natural or artificial material encountered in the excavation which cannot be removed until broken up by explosives or mechanical means such as, jackhammer or percussion drills.

1.2 **Other than Rock:** All other material encountered in excavation.

3.1.13 Rubbish

Rubbish or debris is not to be buried on site. Remove all rubbish from the site.

3.1.14 Service trenches

a. Excavation

If practicable, make trenches straight between manholes, inspection points and junctions, with vertical sides and uniform grades.

b. Trench widths

Keep trench widths to the minimum consistent with the laying and bedding of the relevant service and construction of manholes and pits.

3.1.15 Backfilling

a. **General:** Backfill service trenches as soon as possible after laying the service. Place backfills in layers. Compact each layer to a density sufficient to minimise settlement.
b. **Backfill material:** Excavated spoil or well graded inorganic material with maximum particle size of 75 mm.
c. **Next to services:** Do not place any particles greater in size than 25 mm within 150 mm of services.
d. **Under-paved areas:** Coarse sand, controlled low strength material or fine crushed rock.

3.1.16 Shoring

The Contractor/local builder shall shore up as necessary and batter the faces of excavations. The stability of soil faces during excavation work will be entirely the responsibility of the Contractor who shall make good any damage which may occur as the result of soil failure.

Where excavations at different levels are adjacent, the sides of the lower excavations shall be supported in such a manner that the bearing capacity of the retained soil is not impaired.

SECTION VII: ANNEXES TO THE CONTRACT

ANNEX I: TENDER AWARD LETTER

ANNEX II: PERFORMANCE SECURING DECLARATION

ANNEX IV: CONTRACTOR'S PRICED BILL OF QUANTITIES

ANNEX V: CONTRACTOR'S INSURANCE CERTIFICATE

ANNEX VI: CONTRACTOR'S HONIARA CITY COUNCIL BUSINESS LICENSE

ANNEX VII: CONTRACTOR'S COMPANY HAUS CERTIFICATE

ANNEX VIII: CONTRACTOR'S INLAND REVENUE TAX CERTIFICATE

ANNEX IX: CONTRACTOR'S WORK SCHEDULE